DEVICE the newsletter for the electronic guitarist/musician VOL.1:4-79

REVIEW:

A/DA HARMONY SYNTHESIZER

by Craig Anderton

For as long as I've been building electronic gizmos, people have been asking me for something that could add parallel harmony lines to an instrument or voice. This is something people obviously want very much - but so far, they haven't been willing to shell out the money required for something like an Eventide Harmonizer, which does the job but is not at all inexpensive.

Enter A/DA's Harmony Synthesizer, which lists for about $500. It uses analog techniques, as opposed to Eventide's use of digital technology, resulting in a considerable cost reduction; but, using analog delay opens up the Pandora's box associated with analog delay - noise, lack of freqency response, distortion, and so on. How successfully you feel A/DA (*cont. on page 11*)

IN THIS ISSUE:

REVIEW: A/DA Harmony Synthesizer.....1
RESULTS: Effects Opinion Poll - our readers speak out on the state of the effects art.....1
AMS-100, PART 4: voltage controlled phase shifter module.....7
CASE HISTORIES procedures to follow when troubleshooting effects.....13
ON LOCATION: WEST GERMANY.....15

RESULTS: EFFECTS OPINION POLL

(Compiled by DeAnna Holohan; written by Craig Anderton) In issue 1:1 of DEVICE, we presented an opinion poll that asked our readers to answer several questions about effects boxes: which ones they liked, which ones they disliked, their experiences with repairs of effects, and more. Many of you included lengthy, in-depth answers to the questions; some of the most provocative comments have been included in the text.

Overall, the survey showed that different people can hold widely varying opinions on the same effect: several effects were lauded by some readers, and condemned by others. So, choosing an effect is still quite clearly a highly subjective matter. Nonetheless, certain trends became very evident, as you will see when you read over the results.

We'd like to thank all of you who took the time and trouble to fill out our survey. Your efforts are appreciated by all of us at DEVICE, and we're also certain they will be appreciated by your fellow readers.

QUESTION #1: "Are there any effects boxes for either studio or stage which you feel represent either exceptional value or exceptional performance, and which are they?

MXR products were mentioned the most often; of these, the most popular were the MXR Distortion + and MXR Flanger. But several readers didn't reference specific products, instead casting their vote for MXR products in general...I'd say from the results of the survey that the MXR line has probably the greatest loyalty from performing musicians, although there were some dissenters; one reader characterized MXR (*cont. on page 2*)

(*Survey results cont. from page 1*)
products as "prices inflated, quality reputation overstated". Few other readers agreed, however.

Musitronics and Electro-Harmonix made a just about equal showing, although E-H units generated more controvery than any other company...as answers in subsequent sections will show. Morley followed just behind, in 4th place for overall references.

Individual products: The Mutron Bi-Phase was the runaway winner for phase shifter preferences, and was mentioned almost exactly twice as often as the MXR line of phase shifters. The Mutron Volume Wa and Mutron III were also mentioned, but as in the case of MXR, several people cast their votes for Musitronics products in general.

The most popular E-H product was unquestionably the Deluxe Memory Man, referred to by several readers as a "best buy" that offered a great number of functions for the cost. Other readers like the E-H Clone Theory chorus box and Hot Tubes fuzz box. A few readers said they liked E-H products generally, although several complained of noise and flimsiness in construction...but they didn't complain about the price, which users of other brands often did.

Other products that received a good response were the Morley Power Wa pedal, the Roland Space Echo (the most popular reverberation device by a landslide), and the A/DA Flanger (one reader said he thought it offered not only exceptional performance, but also represented good value for the money). The Maestro Echoplex had quite a few fans, but just about an equal number of detractors ("overpriced" and "noisy" were the most common negative comments). The Cry Baby Wa-Wa was also mentioned several times as being highly cost-effective.

I was pleased to see that among readers who referenced a specific brand of effects, the projects that I've designed for Bill Godbout Electronics scored very highly; this survey wasn't really designed to include kits, so it was gratifying to see that a lot of people enjoy my projects. As far as other kits were concerned, one reader raved about the Aaron-Gavin equalizer kits, while other mentions went to PAIA and Southwest Technical products.

Many other products were mentioned, but they did not receive enough responses to justify inclusion of such a long list here.

QUESTION #2: "Are there any effects boxes which you feel are particularly shoddy in quality or performance?"

The greatest number of complaints by far concerned Electro-Harmonix units in general, which is all the more interesting considering how many readers held particular E-H products in high regard. Virtually all complaints involved either the construction or noise level; one reader said that E-H units "break easy but sound great". It was pretty clear from reading the results that readers have a love/hate relationship with E-H; they like the price and originality of functions, but prefer the more solid construction of devices such as MXR's. However, E-H has recently been involved in the process of revamping their line, and these were the products that were mentioned most favorably in question #1. Perhaps E-H is carrying a bad rep from their earlier days; perhaps the quality control is lacking. In any event, E-H was definitely the most controversial effects company as far as DEVICE readers are concerned.

PAIA is another company with which readers clearly have a love/hate relationship. One reader said the PAIA Phlanger was "unbelieveably shoddy", but another reader said "I consider the PAIA Phlanger a 'best buy' with its built-in power supply, multiple user controls and external inputs, not to mention audio quality that is at least as good as the majority of flangers on the market (of course, Craig Anderton's mods make it better)". I suppose the truth lies somewhere between the two extremes...which is where the truth seems to hang out a lot these days.

Considering how many musicians really badmouth effects in general, it was interesting that aside from E-H no one manufacturer registered a lot of complaints. However, the Univox Echo Chamber got a couple of knocks, as did their phase shifter; a couple of readers thought the Echoplex was overpriced; and one reader said that the BNB Kits he bought had the circuit board power traces to the IC reversed. Morley also had some detractors who felt the products were vastly overrated and generally noisy; one comment was "some Morley units are not as reliable as touted; their 'rotating tuna fish can' (echo unit) isn't as troublefree as alleged".

One reader said "there has never been built the perfect fuzz box; these ones are especially junky: Fender Bender (nearly good but plastic sounding), Big Muff Pi (the old ones were excellent, the new ones sound like tin foil), Foxx Tone (without doubt the noisiest box (*cont. on next page*)

(*Survey results cont. from page 2*)
on the market), Craig Anderton's Ultra-Fuzz (I hate the triggered input! Stinks), Craig Anderton's Tube Sound Fuzz (better, but too noisy on high distortion). Conclusion: keep trying, guys". Just thought you ought to know not everybody likes my stuff!

QUESTION #3: "Is there any one manufacturer that you feel deserves a reputation for reliability and quality?"

This question generated a lot of response, and MXR was definitely the leader. The percentage of total responses broke down like this:

MXR.....44%
Musitronics.....18%
Morley.....12%
Electro-Harmonix.....6%
Roland.....4%

A/DA and Ross had less than 3% each; Yamaha, Fender, Mitey Mite, Ashley, Peavey, Music Man, and PAIA has less than 2% each.

Comments concerning MXR included statements like "My MXRs have been through about everything and still work"; "MXR is the cream of the crop as far as quality is concerned"; another reader was less charitable when he called MXR "the best of many evils". Comments on other companies included "E-H is generally good quality at the right price. However, their solder joints sometimes need reworking...witness 10 band EQ, pots had worked loose in transit from factory". Another E-H comment: "I don't care for E-H's construction of the casings, but compromises have to be made and they are not exactly junk". Morley fans seemed a little lower in enthusiasm than MXR users, but expressed considerable satisfaction. It's interesting to note that Musitronics scored consistently high with musicians, in spite of prior financial problems that made many of their products hard to find. Now that ARP has purchased the Mutron line, hopefully Musitronics products will receive more consistent distribution.

QUESTION #4: "Is there any one manufacturer that you wish would disappear from the face of the earth?"

Manufacturers will be pleased to know that by far the largest response to this question was "no". However, the company that got the most mentions was E-H, with PAIA running considerably behind. Complaints against E-H concerned the noise/packaging problems referred to earlier (the incredible polarization concerning E-H products still amazes me...people either love them or hate them). Comments about PAIA were usually sympathetic, despite the negativity; here are two representative quotes: "They've got a nice idea, but they're aren't pulling it off at all!" and "I have a strong love/hate relationship with PAIA. Their kits are usually very cost beneficial, but invariably include a serious design flaw. Being kits more for the experimenter you can't expect miracles, but...".

One reader wished that Dokorder would disappear from the face of the earth, and then noted that it had in fact done just that. One response I particularly liked was the reader who hoped that Muzak would disappear from the face of the earth...if anyone gets up a petition for this, I'll be glad to sign it.

QUESTION #5: "I feel that specifications published in the majority of the ads are 1) meaningless 2) slightly helpful 3) very helpful."

Of the total number of responses to this question, the breakdown was as follows:

Very helpful.....16%
Slightly helpful.....53%
Meaningless.....29%

Several people were pretty adamant about them being meaningless; one reader said "when they bother to print any (specs), 90% are helpful, 10% meant to be misleading", while another reader included the caustic comment, "I consider published specs in any ads to be useful for lining bird cages".

However, I feel personally that the tide is turning towards including better, and more meaningful, specs with product descriptions. The main problem is that specs are not arrived at through common test procedures; for example, does a noise spec of "-84 dB" refer to noise level below a nominal level such as 0 VU, the maximum available output, or what?

QUESTION #6: "The qualities that are most important to me in a device are (enter 1 for very important, 2 for somewhat important, 3 for not important): low power consumption, easy availability of service, low cost, durability of packaging, availability of AC adapter, balanced line inputs/outputs, low noise."

The following ratings were arrived at by totalizing the numerical importance given to each question by each reader, which was then divided by the total number of responses.

Not surprisingly, the most important characteristic by far was low noise (1.09 rating).

(*cont. on page 4*)

(*Survey results cont. from page 3*)
Many readers went out of their way to note that this was most important to them by adding bunches of exclamation marks. Hopefully manufacturers will take this overwhelming unanimity into account, and design with low noise as a primary objective. Based on this survey, it seems people would be willing to pay a bit extra for effects that are quieter than the average.

Next most important was durability of packaging, with a 1.41 rating. Several people added that they really wanted something that would work with a minimum of maintenance, and that packaging was an important part of that.

Cost (1.78 rating) and availability of service (1.79 rating) were of virtually equal importance. Most of the comments concerning cost were "you get what you pay for", which is certainly hard to disagree with. Many readers judged service as not too important, since they seldom required servicing for their units (see question #7).

Availability of AC adapter scored a 2.13 rating; many people felt AC adapters were generally shoddy, so a lot of DEVICE readers took the matter into their own hands and built AC adapters themselves. Unfortunately less technically-oriented people don't have this option; to them the availability of an AC adapter was far more important.

Balanced inputs/outputs (2.31 rating) was next to last in terms of importance, which again is logical for stage-oriented musicians. Judged least important of all was energy efficiency (2.46 rating), although many readers added comments such as "energy efficiency is more important if an AC adapter is not available". The basic trend, if you want to call it that, is that people do not like batteries in multiple effect systems; and since they're using AC adapters, they don't really care about current consumption.

So, if manufacturers really want to get on the good side of musicians, they should design for absolute lowest cost and concentrate on good packaging...with an optional high quality AC adapter that can power several of their units. But, will musicians be willing to pay the higher price this entails? After all, cost rated third in importance...and you don't get something for nothing.

QUESTION #7: "Are there any companies with which you have had good experiences in getting a piece of equipment serviced?"

Manufacturers will be glad to know that the majority of people have never had anything go wrong with their units, and therefore have no experiences to report, either pro or con. Additionally, quite a few people fix their own devices - although the willingness of companies to part with schematics to help people repair their own devices varies wildly. One reader complained that MXR would not provide schematics for user repairs, but on the other hand several people cited MXR as giving fast and free repair service, many times on units that were out of warranty. (Incidentally, most of the companies I've dealt with will often fix out of warranty units for free; they generally feel responsible for their equipment, and the reason they date the warrantee is to keep out the flakes.)

This may be getting repetitive, but once again, MXR scored highest in total responses for efficiency in handling repairs, with Musitronics and Electro-Harmonix tied for 2nd. PAIA and Peavey came in next (one reader said PAIA seemed "conscientious and responsive", although PAIA also had some detractors ("they didn't even service it!"). Another company that made people happy with their service was Oberheim Electronics (a couple of very pleased readers). One reader was knocked out by Crown's service - so much so that I just had to print his comments: "Crown is a mind boggling company to deal with. Write them a question and the tech adviser calls you up with an answer. Rather than hope you forget about your guarantee, they send you a guarantee credit card, pay shipping both ways, and if you tell them your stuff went bad and you've got a gig that night, chances are they'll arrange to have you pick up a new one - yours to keep - at the nearest dealer to you. Too bad they don't make everything on earth."

I don't know if Crown manages to maintain these standards in the dealings with all their customers, but they have certainly figured out how to take care of at least one of them.

An interesting point about repairs is the fact that those who do their own usually commented that typical problems are trivial, such as a broken wire, loose solder connection, etc. If more musicians are willing to get into troubleshooting their own devices, I bet the rate of repairs would go way down for all brands.

QUESTION #8: "Are there any companies that have given you the runaround when getting something (*cont. on next page*)

(*Survey results cont. from page 4*)
serviced?"

Not too many people were dissatisfied with service; a couple of readers found Fender unresponsive, and PAIA's service department also had some criticisms. One unhappy Morley pedal owner wrote that "Morley service was slow, non-communicative, and in my opinion overpriced ($65 for so-called overhaul of Rotating Sound/Wah/Vol pedal)". There was a complaint about long turnaround and lack of repair on a Maestro phase shifter, but by and large people were satisfied with repair services.

QUESTION #9: "How important do you consider standardization of effects with regards to signal levels, input/output impedances, methods of determining specifications, and the like - 1) absolutely vital 2) nice if they get around to it 3) unnecessary."

As far as standards went, just short of 2/3 (59%) felt that standards are vital to establish; many of these singled out the need for uniform test procedures when giving specs to effects. 35% considered the state of affairs OK as is, with only 6% opposed to the idea of setting up standards. In the April issue of Contemporary Keyboard, publisher Jim Crockett's editorial advocates the adoption of standards for keyboard equipment; in issue 1:3 of DEVICE, Intersound goes on the record as supporting standards. It looks like the time is right for action - let's have some more dialogue on this.

READER COMMENTS. I must say that after sorting through all the polls, I was uniformly impressed with DEVICE's readers. You all seem to be pretty much into this whole scene, and those who weren't expressed a desire to learn more. As a result, some of the suggestions made at the end of the poll sheets are very incisive, and I think any manufacturer would do well to pay attention to the following. Here are some of the most interesting comments; any responses are mine.

"Hope my response helps influence some positive action by effects manufacturers. E-H has about the lowest prices; main drawback - you must keep guitar at maximum volume to minimize noise, more so than some other brands. Perhaps the S/N problem can be eliminated by built-in preamplification." Well, here is a case where standardized signal levels would definitely help.

"Please keep the reviews on guitar synthesizers coming". We'll do our best.

"Here's something I consider important which the manufacturers should know about: how about an effects loop built in to all amplifiers?" Great idea...it only costs two more jacks and wires, and would greatly increase flexibility.

"I would like to see more effects that are usable for both line level (recording) and mic level (instrument) so I don't have to buy 2 of some effects, or go with preamps and attenuators". Amen. I was talking with the chief engineer from DOD at the NAMM show, and he showed me some of their boxes that have a mic/line level switch (though it wasn't called that). In the mic position, the input stage boosts the gain and the signal is attenuated by an equal amount at the output, maximizing S/N. The line level position accepts higher level signals. This is one way to approach the problem.

"The total number of devices I own are Craig Anderton designs that I built, so I have no opinion on commercial equipment". Several DEVICE readers made similar statements, which was gratifying.

"Most effects are too limited and not as versatile as they could be". Traditionally, many manufacturers have felt musicians are scared of too many knobs. But perhaps the times are changing; another reader writes "most effects are too damn expensive - especially for us average income people who can't afford $100-$200 just to make my guitar sound different now and then". Again, more versatility (extra features, functions) might help.

"Ads are generally more hype than practical information"...but how many people can truly understand specs anyway? The hi-fi industry has tried to educate its consumers; maybe effects manufacturers should try some of the same techniques.

"I'd like to see manufacturers get into modular effects to avoid duplication of power supply, cables, etc. It seems a lot of people build up pedalboards and it would help if effects were 'pedal-boardable' off the shelf". Of course, this would add to the price of individual effects, but you might make this up on multiple effect systems by using only one AC adapter, etc. Incidentally, I have just finished revising my first book to "1979 specs", and the major change was to re-design all projects specifically to be "pedal-boardable".

Here's someone who's bullish on effects: "I feel that the quality of effects is constantly improving as it becomes easier and cheaper to get high quality parts. It is important for the consumer to be aware of the different units (*cont. on page 6*)

(Survey results cont. from page 5)
available so he/she can get the most for the money. For me right now the A/DA Flanger is the best low cost flanger for the money. It has an excellent sound, low noise/with a noise gate to cut out unwanted residual noise, and is voltage controlled, which makes it exceptional for the synthesizer player interested in obtaining effects other than your average". Voltage controlled effects are certainly handy, and I hope more manufacturers lean in that direction.

"I think that all effects should have true bypass switches instead of the usual in/out switch". I agree most emphatically. When you want something out, you want it out all the way.

"I think all effects should have 3 prong plugs". Someday they will.

"Schematics of the units you review would be nice". Well, it's hard enough getting stuff to evaluate, let alone getting the schematics.

"I'd like to see more low-noise chips being used. I'm also irritated by some impedance levels that load down the guitar, or the effect preceeding it. MXR devices have not been too bad, a lot of E-H and Roland have been".

"Most repairs I have made on effects have been minor problems like bad wires, solder joints, etc." All the more reason for musicians to tackle their own troubleshooting.

"I would like to see more companies offer effects in kit form". What about it, manufacturers...is this feasible, or are there just not enough kitbuilders to make it worth while?

A reader in Hong Kong likes building my projects because of "feelings of accomplishment and fun, and obtaining effects at ½ cost". He also had an answer to question 4 ("is there any one manufacturer you wish would disappear from the face of the earth?") that gave me something to think about: "No, I don't like to hurt people. Disqualified people will disappear of their own will". Another reader gave a similar answer: "People can educate themselves to choose good stuff. Then the rotten ones would disappear all by themselves".

"I would like to see manufacturers provide soundsheets for every device they make. Most have soundsheets that only feature a few products".

"Overall, I feel most electronic music device manufacturers are wholeheartedly ripping off the musician who doesn't know didly about electronics and is therefore willing to pay $100 for about $10 worth of parts". Sorry, but I can't agree there. A $100 list price item hits the store for $50. If the manufacturer goes through a distributor, then the unit leaves the factory for about $33. Subtract $10 worth of parts, and you have $23 left to pay for taxes, employees, tooling, warranty service, more taxes, social security payments, various charges and fees that local governments charge, packaging and shipping, advertising...it's not that easy to be a small business these days, ask any newsletter publisher! Stores don't make out like bandits, either; they have to usually discount from the list price, and they have a mass of expenses to pay too. So where does the rip-off lie? It's a combination of factors. I think in the long run the rip-off is distributed more or less evenly between companies, musicians, stores, and taxpayers; I certainly haven't seen any effects companies grow rich enough to buy an airline, department store chain, or record company, for example.

"I feel if one is going to use devices than he/she should also know the 'innards' and how to service them. Musicianship does not stop at the output jack of the guitar". I couldn't agree more, although I can also understand why some people just plain don't want to know nothin' as long as the thing works.

"Most warranties are junk". Well thankfully, the results of this poll pretty much contradict that idea.

* * * *

DEVICE invites manufacturer reactions to this poll; we're not out to crucify or deify anybody, and want very much to make this process a two-way street. The purpose of this poll has been to find out what musicians are thinking, to give a pat on the back to those manufacturers who are doing their jobs well, and to point out to others where possible problems in relating to individual musicians might lie. Any negative comments are not given for the sake of criticism; rather, I prefer to think that these comments are free consulting from a select group of experts for those manufacturers who are interested enough to listen.

Once again, on behalf of the readers of DEVICE I'd like to thank everybody who responded to the poll. You people are something else!

construction: BUILDING THE AMS-100 - part 4

by craig anderton

Last issue, I said the next AMS-100 module would be a VCA. However, after coming up with the VCA I decided to play around with some phase shifter circuits - and since we have been wading through such practical stuff for the last few months, I thought it would be a nice change to do a somewhat sexier circuit this month...so let's shift some phases around instead.

Although this phase shifter is designed for use with the AMS-100 series, it is also a dandy stand-alone phaser and makes a useful addition to any music synthesizer system that follows the "0-10V, exponential response" convention for control voltages.

Other features include easy cascadibility of phase shift sections for more degrees of phase shift, a resonance control for sharper phaser effects, choice of polarity of the phase shifted signal ("positive" and "negative" phasing), vibrato/phase switch, and multiple control voltage inputs.

HOW IT WORKS. Because this is a somewhat more complex circuit than usual, Fig. 1 shows a block diagram that should make it easier to understand the schematic. The input signal goes through a buffer/inverter/attenuator stage and then splits into two paths, one of which goes into the phase shift stages, and the other of which continues on to the output mixer. The output of the phase shift section feeds a polarity changing circuit that can invert the phased signal if desired. The output mixer then combines the phased signal and straight signals. That's it for an overview; here are the details.

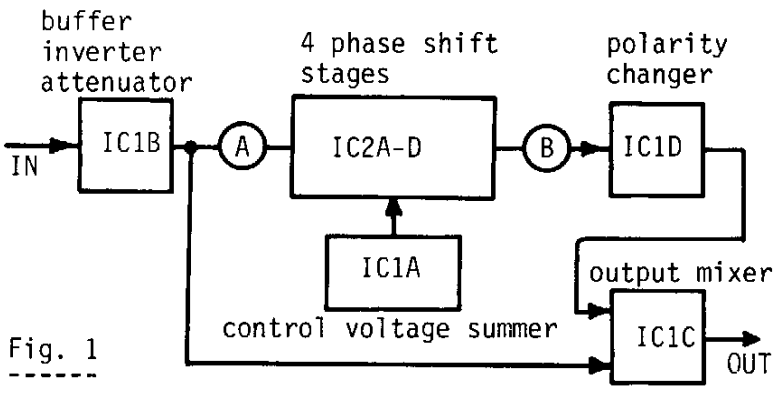

Fig. 1

Input stage: The phase shift stages are designed to accept a ±1V signal, which does not accomodate the line level signals used throughout the AMS-100. So, the input stage attenuates line level signals by a factor of two to avoid distortion. This input stage gives some buffering (100k input impedance), and inverts the signal so that when the output mixer inverts the signal again, the output signal is in phase with the original input signal.

Phase shift stages: First of all, note that point A on page 8 connects to point A on page 9, and point B on page 8 connects to point B on page 9. The phase shift stages are built around an SSM2040 VCF chip, which considerably simplifies the design process (to say the least). If more than 4 stages of phase shift are desired, simply build up another phase shift section around another chip, and put this new section in series with the existing phase shift section. However, if you add more stages the resonance control (R23) should tap off the last output of the total phase shift chain instead of the output of the first phase shift section. The voltage control input of the second section should be fed through another voltage divider coming off pin 3 of IC1A, using the same values as R27 and R6. Do remember that cascading additional stages also means additional noise...I find 4 stage shifters perfectly adequate; if I need a more intense sound, I either crank up the resonance or go to a flanger type of circuit.

Control voltage summer: The SSM2040 is designed to accept a negative-going control voltage with respect to ground. Since we're using positive control voltages in the AMS-100, IC1A inverts the control voltage to properly drive IC2. As an additional bonus, IC1A is set up as a summing amp so that multiple control voltages may be used to drive the phase shift stages.

Polarity changer: IC1D changes the phase of the phase shifted output. With R14 at ground, the phase is inverted ("negative" phasing); with R14 at the center of R22 (which must be a linear pot), the phase shift section is can-

(*text cont. on page 10*)

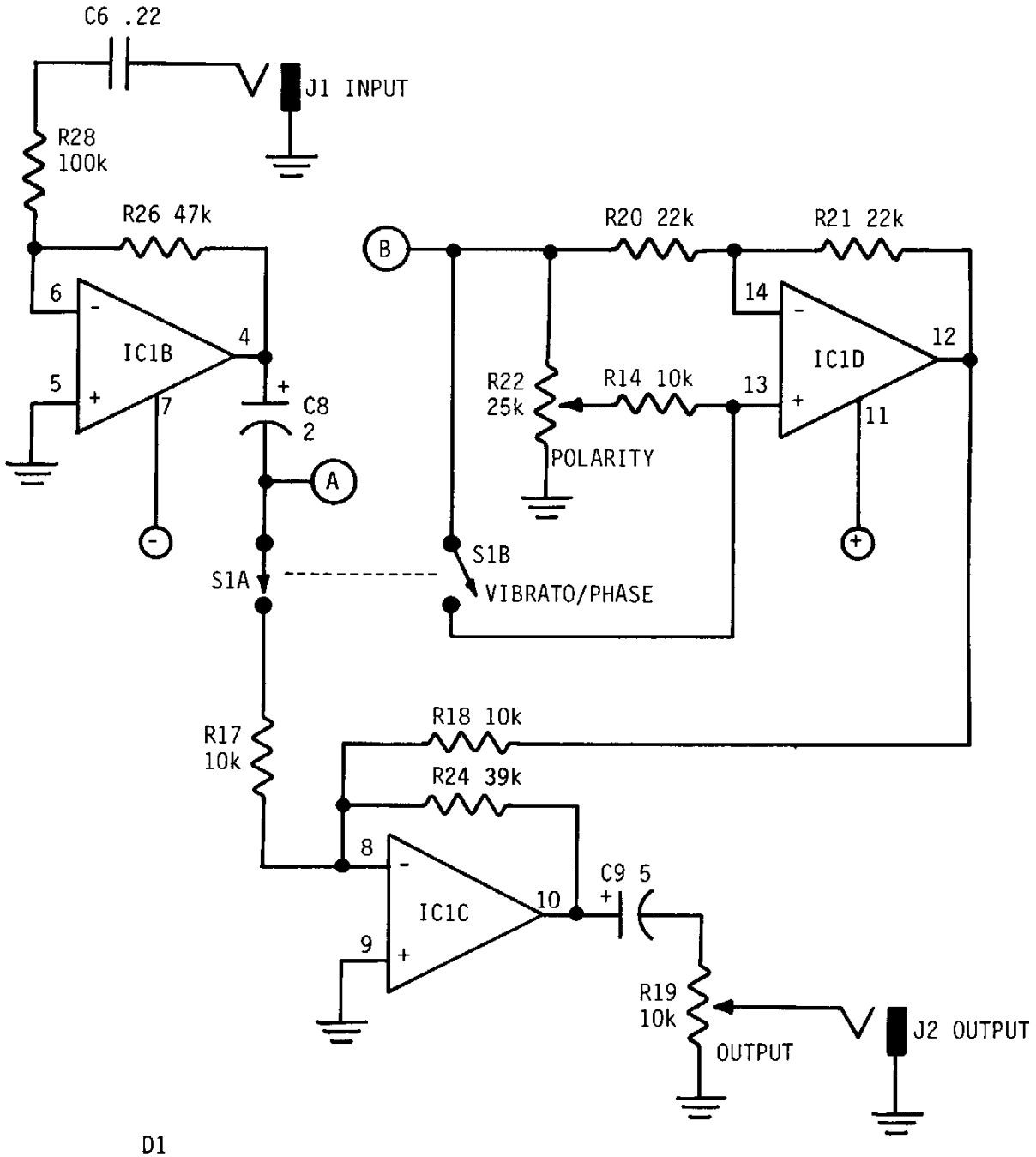

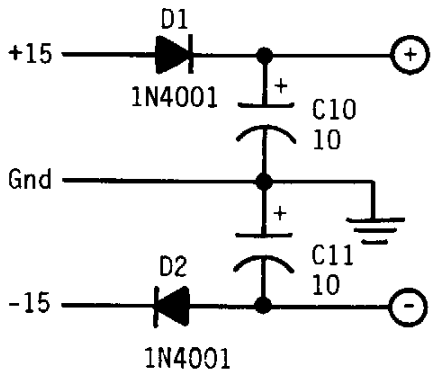

IC1 = 4136 quad op amp
IC2 = SSM2040 filter

VOLTAGE CONTROLLED PHASE SHIFTER

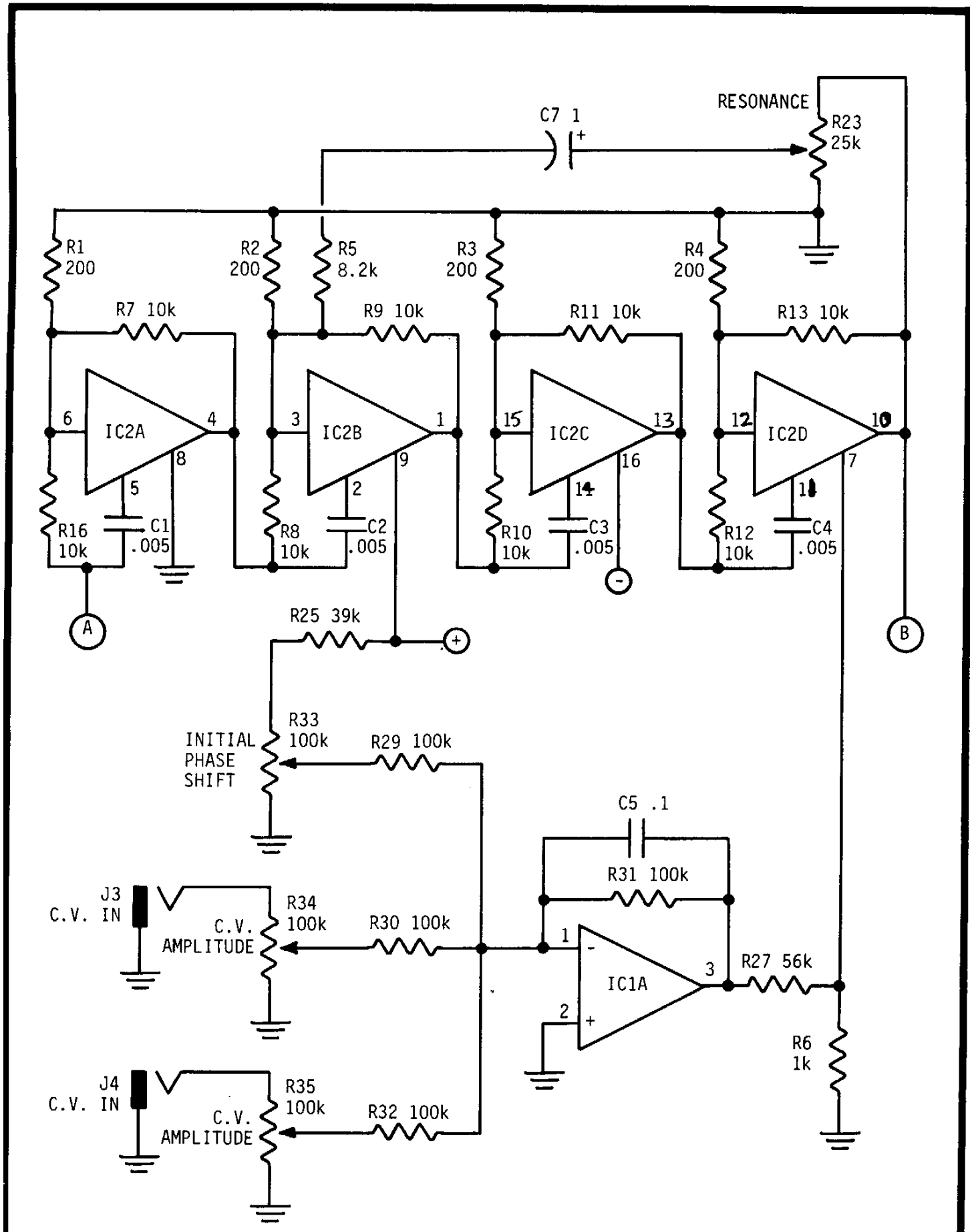
RESONANCE
C7 1
R23
25k
R1
200
R2
200
R5
8.2k
R3
200
R4
200
R7 10k
R9 10k
R11 10k
R13 10k
IC2A
IC2B
IC2C
IC2D
R16
10k
C1
.005
R8
10k
C2
.005
R10
10k
C3
.005
R12
10k
C4
.005
A
B
R25 39k
INITIAL
PHASE
SHIFT
R33
100k
R29 100k
C5 .1
R31 100k
J3
C.V. IN
C.V.
AMPLITUDE
R34
100k
R30 100k
IC1A
R27 56k
R6
1k
J4
C.V. IN
C.V.
AMPLITUDE
R35
100k
R32 100k

(*AMS-100 continued*) celled out so that you hear only the straight signal in the output mixer; and with R14 connected to the top end of R22, the phase shifted signal is non-inverted ("positive" phasing). In terms of sound quality, positive phasing sounds like traditional phasing, whereas negative phasing sounds more like filtering. Increasing the resonance helps to heighten the illusion of filtering rather than phase shifting.

The output mixer combines the straight and phase shifted outputs, and adds a bit of amplification to bring the signals back up to somewhat more than line level (remember, we had to attenuate things at the input, and this makes up for it).

Power supply: The phase shifter uses the standard AMS-100 ±15V supply, with a couple of diodes and capacitors added in for decoupling. The current consumption for this module is about ±12 mA.

CONSTRUCTION NOTES. All controls are panel controls; there are no trimpots required with this module. I was able to fit all the components on a 2.5" X 3.5" circuit board, and all controls and jacks on a panel module measuring 2" X 7". Other than that, there's not much to say about construction; we don't need a lot of precision in the control voltage circuitry, and the audio part of the circuitry is pretty non-critical.

USING THE PHASE SHIFTER. Start off with S1 in the phase position, and set R22 for positive phasing. Patch into the inputs and outputs,turn up the output control, and play a few notes on your instrument while varying the initial phase shift control throughout its range. You should hear that familiar phase shifter sound; if not, check over your control settings. Now try increasing the resonance control - the result will be a much sharper sound. By the way, if you wish to use the phase shifter as a stand-alone pedal controlled phaser, simply house R33 in a footpedal shell and you're ready to go.

Now, set R22 to its midposition; the phase shifted sound should drop out completely, leaving only the straight sound. Notice that this cancellation occurs at a smooth, constant rate, so that settings between the extreme end and the center of the control will produce lesser or greater amounts of phase shifted sound.

Next try putting R23 in the negative phasing position; this should give a different flavor of phasing sound altogether. The vibrato switch isn't really too useful unless you're driving the control voltage input with an LFO (low frequency oscillator), so just forget about it for now. It will come in handy with other controllers that will be published in future issues of DEVICE newsletter.

USING THE AMS-100 ENVELOPE GENERATORS WITH THE PHASE SHIFTER. You can feed the outputs from issue 1:2's envelope generators into the control inputs for some novel phase shifter effects. I've noticed that the "A or D" generators can handle most situations, although the more complex AD generator using the 555 also has its uses. One of my favorite patches with the A or D generator is to set the attack time for about half a second, and then strum a chord. This produces a "rising" phasing sound, and hitting additional chords produces additional phase changes. Very short decay times also give a novel effect...you'll see what I mean.

Another nice setting is to adjust R23 for very high resonance, but then use R22 to mix the phase shifted effect way in the background. This produces a "whistling" sort of effect that relates to the guitar much better than if you were using a VCO mixed in with the guitar sound.

Of course, these suggestions are just to get you started...the real strength of a modular system is that there are virtually limitless possibilities. You can feed two separate envelopes into the 2 voltage control inputs, one of which is set for a rapid decay, with the other set for a slow attack; this will give a phase shift effect that drops rapidly at first, then slowly increases back up again. But, I'm sure you'll find out all these things for yourself before too long, so there's no real need to go into this any further. I should give one final caution, however; it takes some time and effort to figure your way around all these various controls, so don't get disappointed if things don't make a lot of sense at first...they will as you practice with the module.

OBTAINING PARTS. The 4136 quad op amp is available from a variety of sources, such as Bill Godbout Electronics (PO Box 2355, Oakland Airport, CA 94614), Jameco, and many other mail-order electronics outlets.

The SSM2040 is harder to find; I ordered mine directly from Eμ Systems, 417 Broadway, Santa Cruz, CA 95060. Price of the 2040 is $10, and there is also a $2 shipping and handling charge per order (I suggest you get at least 2 or 3 of these chips, as we'll be using them in the future).

Next month, another module.

(*Harmony Synthesizer cont. from page 1*)
has solved these problems will determine how much you like the Harmony Synthesizer.

WHAT IT DOES. Actually, there are several operating options with the H.S. One footswitch selects between delay only and harmony modes. In the delay mode, the H.S. acts like a standard analog delay, with a range of 25 ms to 200 ms. As delay increases the bandwidth decreases; this means that at a 200 ms delay, you're losing a lot of highs (signal response is halved at only 570 Hz, although at 25 ms things are better...the half-response point is 5 KHz). Another option in the delay mode is to add regeneration, using another footswitch. The regeneration control will allow you to get enough feedback to cause oscillation, if desired, while with less extreme settings you will get a solid-state echo sound. An LED lights up above the regeneration control when regeneration is selected.

In the harmony mode, an LED lights in the center of the unit. There are 3 basic controls associated with the harmony section: coarse tune, fine tune, and delay. Coarse tune and fine tune select the harmony interval, which varies from approximately two octaves below, to one octave above, the input signal, in a continuously variable fashion.

In order to understand the effect of the delay control, we need to understand a little bit about how a harmony line is generated electronically. In harmony synthesis circuits, the original signal is "spliced" together and re-processed to either stretch the signal out with regards to time, or compress it, in order to change the pitch. However, this splicing process produces audible changes to the original signal. In the case of the H.S., the splicing process generates a square-wave driven tremelo effect. The delay control changes the speed of this "tremelo" by messing around with the splicing rate. Slower settings of this control produced the most musically acceptable results, while faster settings produced an annoying type of buzzing sound.

There is an additional footswitch available in the harmony mode to switch between the primary set of harmony tune controls and another, auxiliary set of harmony tune controls...so, you can think of this footswitch as selecting one of two harmony presets. This is real handy for when you want something like the ability to shift between a major 3rd and minor 3rd harmony, for example.

Other controls include an effect in/out footswitch, a mix control to determine the blend between the normal sound and the delayed/harmonized sound, and a level control. The level control must be carefully set to avoid distortion. The third and final LED indicates when the effect is "in".

Jacks include an input jack (the input Z of the H.S. is about 95K), mix out jack (an output that contains the mix of processed and unprocessed sound), effect out (the processed output by itself - useful for stereo imaging, additional processing of the harmonized sound, etc.), and control pedal. A/DA offers a well-built accessory pedal that plugs into this jack to allow you to sweep the harmony interval with a footpedal.

PHYSICAL APPEARANCE. First of all, the H.S. is the biggest effects box I've ever seen that is designed for floor use (11" X 9"). It is well constructed - cast aluminum case, recessed knobs, 3 conductor power cord, heavy-duty footswitches, and the like. But taking off the bottom cover was really a trip...especially when I started counting up the ICs. There are 42 ICs all told (does this explain why I haven't even attempted to do a pitch changer project?). There are 3-TL074 , 2-SAD1024 delay lines, 5-3403 quad op amps, 5-3080 transconductance amps, 1-571 compander, 2-1458 op amps, 1-3140 FET op amp, 1-15V regulator, and 22 various CMOS logic ICs. Not to mention 14 trimpots...

The power supply is fused, incidentally. So in terms of construction, I'd have to give the H.S. really good marks. From what I've seen A/DA has the best packaging on the market for floor effects, followed by MXR.

However, this doesn't necessarily guarantee electronic reliability, only mechanical reliability. With that many ICs, there are an awful lot of things that can go wrong, despite careful construction. One bad IC and you're out of commission...so while the H.S. may be well built, I certainly would try to handle it as carefully as possible.

I obtained my H.S. in return for writing its instruction manual, so I got one of the first models made. It sounded terrible, and I returned it to A/DA. After a while they fixed it, and incorporated those changes in other units. I believe all units going out incorporate these changes...which is a good thing.

HOW WELL DOES IT HARMONIZE? If you're expecting high fidelity, you're going to be disappointed. The harmony voice not only has that tremelo effect (*cont. on page 12*)

(*Harmony Synthesizer cont. from page 11*)
alluded to earlier, but it also lacks high frequencies and sounds somewhat ill-defined and mushy. The fidelity I can live with (I'm getting used to the analog delay sound) but the tremelo effect does restrict the applicability of the H.S.; after all, you don't always want to have a harmony line that sounds like it's cutting in and out at a regular rate.

In the echo mode, the performance is adequate but certainly not spectacular; I'd say the E-H "Memory Man Deluxe" makes a much better echo unit in virtually all respects (fidelity, lack of noise, options, etc.). Although A/DA has done a truly commendable job of keeping the noise down through the use of tracking filters, compansion, and so forth, the fact remains that when you process a signal as extensively as you must to do pitch changing effects, you're going to add some noise and distortion. Like I said, they've done a good job of taming these problems, but the H.S. is certainly not noise-free.

Now, from the above you might conclude that the H.S. is not a particularly useful device, especially in light of the price tag. But hold on a bit. While the above-mentioned problems do create limitations when using the H.S. in the clinical confines of the studio, the fact remains that A/DA's intention for the H.S. was not to make a studio unit, but to offer a live performance box. And, it is as a live performance box that the Harmony Synthesizer's combination of features becomes highly useful.

NOW, THE GOOD NEWS. The H.S. is very intelligently designed from a user standpoint. Let's say you're a guitarist and you need something that gives you a bundle of really "far out" effects. OK...preset the regeneration for a goodly amount of feedback, tune up the two harmony presets to the desired harmony intervals, and the H.S. is set up and ready to go. Punch in the delay only mode without regeneration when you want doubling effects; then, for solid-state echo add some regeneration. If you want to add a harmony line, punch in to the harmony mode with the regeneration off (the effect of a tracking harmony line in real time is quite astonishing, despite the low fidelity). When playing live, you don't really notice the noise, tremelo, and other glitches as much. But the killer patch is to use the harmony mode with some regeneration. Let's say you have the harmony set for a ½ tone above the original signal. When you punch in regeneration, the first note will come out of the harmony section ½ tone above the original. This slightly higher tone then gets recirculated, and therefore comes out a full tone above the original. This then recirculates again and comes out another ½ tone higher...this gives a "bell tree" effect where you hit one note, and this results in an upwards ascending series of notes. It is a most exciting effect. Naturally, other intervals are possible; having the note descend, for example, gives some equally outrageous effects. Having the option to switch between two harmony lines allows you to preset one to do an actual harmony, and the other to do something like glissando effects. By the way - the rate of the arpeggiation or bell tree effect is a function of the delay knob setting. Slower settings give the sound of discrete packets of ascending or descending notes, while faster settings give what sounds more like a continuous glissando.

OVERALL EVALUATION. Playing with the H.S. has convinced me that the pitch processing module is as basic and useful a device as something like a VCF or ring modulator... I expect that someday there will be voltage controlled pitch change modules built into synthesizers right along with the VCAs and VCFs. The bell tree effects, the octave higher and lower effects, plus the fact that the H.S. will harmonize entire chords (a true polyphonic octave divider is possible with the H.S., as is a true polyphonic octave multiplier) make for some very interesting sounds. Although the sound quality of the harmonized line is not exactly fabulous, you can still mix the harmony line way in the background as an ambience type of effect. This sounded particularly good with my string synthesizer to fatten up the sound a little bit. It can also add shimmering types of effects to guitars. And if comedy is your bag, plug a microphone into the thing and sweep the harmony pitch with the accessory pedal...your voice will go from Alvin and the Chipmunks at the high end down to bass mud at the low end - all in real time. On one piece, I went so far as to set the harmony line two octaves below my voice, and sang the bass part. The effect was really uncanny; it sounded like a bass going through some kind of strange vocoder.

So, the H.S. definitely has some fascinating applications; I think it would be most useful by far in a live context, where critical specs aren't overly (*cont. on page 13*)

(*Harmony Synthesizer cont. from page 12*)
important. But before you get too excited, remember that the harmonized sound is very mechanical - some might say tinny - in timbral quality. Sometimes you have to fight the thing to get the sound you want, and sometimes you get frustrated because there is no way it will get the nice and clean sound you hear in your head. And despite the built-in noise gate and compansion, the noise level is noticeable while you're playing a note - particularly at the faster delay settings, where the tracking filters are opened up the most and thus pass the most amount of hiss.

When looked at purely from a musician's standpoint, therefore, the H.S. presents both exciting new possibilities as well as doses of frustration. From an engineer's standpoint, though, it's amazing that this box even exists at all.

I don't know if the H.S. will set the world on fire; it costs a lot of bucks, and the performance will turn off many musicians who expect perfection. But the usefulness of a pitch-changing module cannot be overlooked...I'm glad I have an H.S., although I doubt if I could have justified the expense of buying one. It has gotten me to think in some new directions (I generated a great rhythm track by setting the H.S. up for a bell tree patch, then simply tapping the microphone stand - it sounded amazing!), it's always fun to blow other people's minds by handing them a microphone and fooling around with the harmony tuning controls, and if I ever decide to play live again, the H.S. will get quite a workout. If you're interested in the H.S., listen to it carefully before you decide to buy - and play with it for at least 30 minutes before you make up your mind.

If you have questions about aspects of the H.S. not covered in this review, you may write to A/DA at 2316 Fourth St., Berkeley, CA 94710.

case histories by Thomas Henry

(Editor's note: many readers wrote in to say they enjoyed Gary Kirkpatrick's article in DEVICE 1:2 on Troubleshooting. Shortly thereafter, Thomas Henry submitted the following article, which seemed like a very good follow-up. Thomas is working on an M.A. in mathematics, and is putting himself through grad school by playing guitar with the "East Side Pharoahs" 1950's Rock and Roll Show. He hates noise with a passion.)

Here are some case histories of various devices I've worked on. There is no better way to learn troubleshooting than to see how someone else successfully solved a problem, so learn from my mistakes. Incidentally, I'm self-taught in this sort of thing. If I can do it, so can you!

CASE #1. I was out on a gig, playing guitar through an Electro-Harmonix Deluxe Electric Mistress Flanger. All of a sudden disaster struck, resulting in a weird oscillating and whistling. I broke down and cried, for this is not a cheap device, and further, it was my favorite. I was the only person in town with one...what would this do to my reputation? I finished the night without it, and brought it home later. I first opened the back and looked. <u>This is the number one secret of trouble-shooting:</u> look before you leap. Well, I looked for quite a while and couldn't see anything awry. So then I applied my 2nd secret of trouble-shooting: <u>Think</u>. So I thought, "what could possibly cause eerie whistling and oscillating?" The guitar sound did get through, but the oscillation was much louder. Did the device have some sort of internal oscillator which could be leaking through into the audio? I didn't think so, but I couldn't be sure. Could it be caused by some interaction between input and output? I looked at the connecting wires and all looked rosy. Then all of a sudden it hit me...what would 60 cycle hum sound like if it were flanged? Ordinary hum is obvious; but what about flanged hum? I listened to the output of the flanger and confirmed <u>something</u> was being flanged. I then grabbed my test capacitor (a 1000 uF, 450V cap on alligator clips; it's indispensable - make one and see) and hooked it across the DC output from the power supply. Good-bye weird noise! I had it! By analyzing the problem, I knew what part to look for. I looked very care-at the big power supply capacitor and found the printed circuit board pad had lifted up and fallen to pieces. I reconstructed this with a small piece of wire and solder, and

(*cont. on page 14*)

within minutes, had the flanger back on the road. A simple story, but one with an important moral: never believe anything anyone tells you, especially a flanger. Even lowly 60 cycle hum can put on glad rags and somehow become something new.

(Editor's note: Very true. I suspect the "whistling" you noted was high frequency harmonics of the 60 Hz hum beating against the relatively low clock frequency driving the delay lines. This problem is called "aliasing", and can also happen if you feed a signal with lots of harmonics into any analog delay line device that does not have elaborate input filtering -- CA.)

CASE #2. My brand new 10 Band Equalizer by Electro-Harmonix was on the blitz, which could only be called itching problems of the worst sort. If you didn't touch it, it worked just fine; but the minute I touched one of the slider pots, it grew allergic to me and crackled in the loudest manner. Remedy: I opened the EQ up and looked. Everything looked ducky. I then put my 3rd trouble-shooting secret into action: Tap and listen. I hooked the EQ up to my amp, and with the back panel off, proceeded to tap with an eraser end of a pencil (anything insulated will work). I didn't just tap anywhere, rather, I thought functionally and tapped the areas which either were potential loosen-ups, or had something to do with the pots. Now, tapping in an imprecise process, in that you can't narrow the problem to individual pads; but in this case, it was enough to tell me (by the loud pops in the amp) that the solder connections were poor. Upon looking closer with a lens (indispensable for microwork) I discerned a thick layer of rosin between the pads and the lugs of the pots. A touch-up with a soldering iron, feeding in a little bit of new solder, cured all. Once again, there's a moral: Believe some of the things that some of the people tell you. Why? I remember once that someone told me that rosin can foul things up. I ignored this advice and thought, "must be a rare occurance". Not so! This is a common problem. When soldering, the joint must be heated long enough so that the rosin turns to liquid and gets out of the way of the connection.

CASE #3: I had just built the Craig Anderton Ring Modulator, made a beautiful case for it, and had it all tuned up. I called a couple of friends over to witness the wondrous sounds which it produced; they were dying to hear what a real live one sounded like. They hastened their way to the house, I hooked it up and wailed, and nothing came out! Well, that's not quite true. I was able to hear the internal oscillator doing its thing. What a let down. My friends hobbled out of the house all broken hearted, so I had to think and this is how I started. I thought, hmmmm...no guitar, but plenty of oscillator. Not in the output; probably a problem in the input. So, I looked. Sure enough - there was a pad on the board that had broken or lifted up, and it was right on the input capacitor, so my diagnosis was correct. Moral: always think functionally, and the details will follow. Also, don't tell your friends to come over on the same day that you build something.

Well, so much for my first installment of case histories. What I learned the hard way you have now learned the easy way... to sum up:

1. Always think first.
2. When you do think, think in terms of functions or building blocks to help isolate the problem. When you've narrowed things down to a particular function, it's much easier to find individual components.
3. After thinking, look. 90% of my best trouble-shooting was resolved by looking only.
4. Always be prepared for the unexpected. Remember that you may think you know what hum sounds like, but do you really?
5. Make a test capacitor. Power supplies can be a problem.
6. Tap with something insulated to find intermittent problems.
7. Rosin is an insulator (gee, I wish I had known that...)

Please note our new address:

DEVICE 12304 SCRIBE DRIVE, AUSTIN, TX 78759

on location: WEST GERMANY

(This is another one of those DEVICE features that will be included from time to time, as the information flows in. Our 1st report on music scenes in countries other than the United States is from ***Brian Jones****, who lives in Germany and is looking to get into a band there. Thanks, Brian, for your report.)*

The most apparent problem here in Germany is equipment. Despite the beating that the American dollar has taken in the last few months, equipment is very hard to come by for reasonable prices. For example, a Fender Champ will cost $160; a '58 or '59 Les Paul goes for about $4255, a Mutron Bi-Phase $397. An MXR Phase 90 goes for $133, and so on. Amplifiers, speakers, guitars, strings (a single Fender .010 costs 96¢), you name it, it will cost more. True, the relative cost may not seem like such a great difference when one looks at the wages workers receive, but for the kid trying to get going, it is an awful lot of money.

Transportation is also a problem; a gallon of gas costs $1.79. As you may know, European cars and trucks are small and have little engines (insurance rates are calculated by horsepower). Streets are crowded and narrow. So, you invariably find groups using compact amps and sound systems, such as the 100 Watt Fender types. I've yet to see a club band unload a couple of JBL cabinets, 14 channel mixer, and so on. Those types of things are only dreamed about over here, and seldom seen. All but the biggest groups use compact stuff.

Considering this situation, the Germans themselves seem to think that only big foreign groups from the States or England are capable of putting on a good show, complete with lights and all. Naturally, this frustrates and annoys the German groups, who are trying to carve a notch for themselves. Thus arose the term "German rock", which means bad things to the people who don't like German groups, and a struggle to the German groups trying to gain respectability. The situation is further complicated by a lack of people in the business with the money and connections for the native bands to turn to for support. In addition, most German bands sing in English, as German does not rhyme easily, and if a band has any hopes of making it internationally, English is the only way to go. This is a shame, because it is very hard to write a meaningful text in a language other than your mother tongue...no matter how good you were in school. Consequently the German rock fans want to hear foreign bands much of the time. The problem is by no means new; even when Elvis started, the German versions had little initial reaction. The type of music that German groups play is often very easy to identify by sound; keyboards predominate in many bands. The Triumvirat-Kraftwerk image is hard to shake off, and German bands very often have that "sound". Of course, any generalization is hard to justify, and there are always exceptions - perhaps in this case, more than the rule.

A few other side items that relate to the music scene in general are of interest. Radio is state owned and operated in Germany, which also means that only what sells gets played, just like at home in the US. But, there are no small college stations or independents to create exposure for less popular forms of music. Stereo components are also very expensive, with very few people having reel-to-reel equipment. I have not yet seen a band record their gigs on tape, and certainly not on those big TEAC jobs. I also find that there are few small live music establishments like I've seen in the States, although this may be because of where I live...living in Heidelberg and talking about the music scene is like living in Boise, Idaho and trying to cover Los Angeles. The big music towns in Germany are Hamburg and Munich. But one difference is that in almost every one-horse town in the US, there was some kind of live music establishment, be it country, MOR, or whatever. There isn't that kind of omnipresent music influence in Germany, and few opportunities to see and hear all different sorts of music.

I hope this report is of interest to your readers.

(We also have a report on file from Kam Dulay, a prolific correspondent from Great Britain who also supplies Synapse with information. DEVICE solicits reports such as this from our readers in other countries; don't worry about your English, it is our experience that most foreigners who speak English do so much better than they realize.

In addition to information about the music scene in general, we would also be interested in news of equipment produced in other countries, and up-and-coming groups.)

3 REASONS TO SUBSCRIBE TO DEVICE:

1. *DEVICE is subscriber supported for maximum editorial freedom. More subscribers means more coverage of musical electronics.*
2. *If you build just one project from these pages instead of buying a commercial equivalent, chances are you'll save the cost of the subscription many times over.*
3. ***No one else covers guitar-related electronics as thoroughly as we do.*** *Every month, we bring you a variety of features including news, accurate reviews, construction projects, interviews, and much more.*

BACK ISSUES AVAILABLE! *DEVICE 1:1, 1:2, & 1:3 are available for $1.50 each. When requesting copies please include the subscription code on the top of your mailing label. DEVICE pays 1st class postage on all orders of two copies or less. On orders exceeding two copies please enclose $1 handling.*

I want to subscribe to DEVICE! (Your subscription will start with issue 1:5)

SUBSCRIPTIONS: __$15 USA __$16 Canada/Mexico __$18 Int'l surface __$24 Int'l air

BACK ISSUES $1.50 EACH: __1:1 __1:2 __1:3 $1 handling if more than 2 back issues

subscription code (if applicable).

NAME_____

ADDRESS_____

CITY_____STATE/REGION_____ZIP/COUNTRY_____

DEVICE is published by Craig Anderton and Roger Clay. Subscriptions: DeAnna Holohan. Photo credits: Vesta Copestakes. DEVICE is assembled during the first 2 weeks of the month, printed during the 3rd, and mailed out during the 4th. If you do not receive consecutive issues within at the most 45 days of each other then contact us. Send correspondance, products for evaluation, press releases, manuscripts, etc. to 12304 Scribe Drive, Austin, TX 78759.

The entire contents of DEVICE are copyright © 1979 (all rights reserved) by Craig Anderton and Roger Clay. No portion may be reprinted without permission of the publishers. All circuits published in DEVICE are intended for the private, non-commercial use of our readers, and are believed to be original and free from patent infringement. However, patent protection of which the authors are not aware may exist for some circuits published in these pages. The publishers do not accept responsibility for failing to identify such patent protection where it may exist.

DEVICE
the newsletter for the electronic guitarist/musician
12304 Scribe Drive, Austin, TX 78759

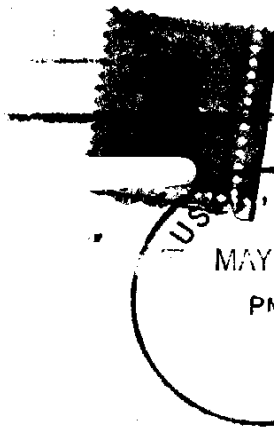

FIRST CLASS