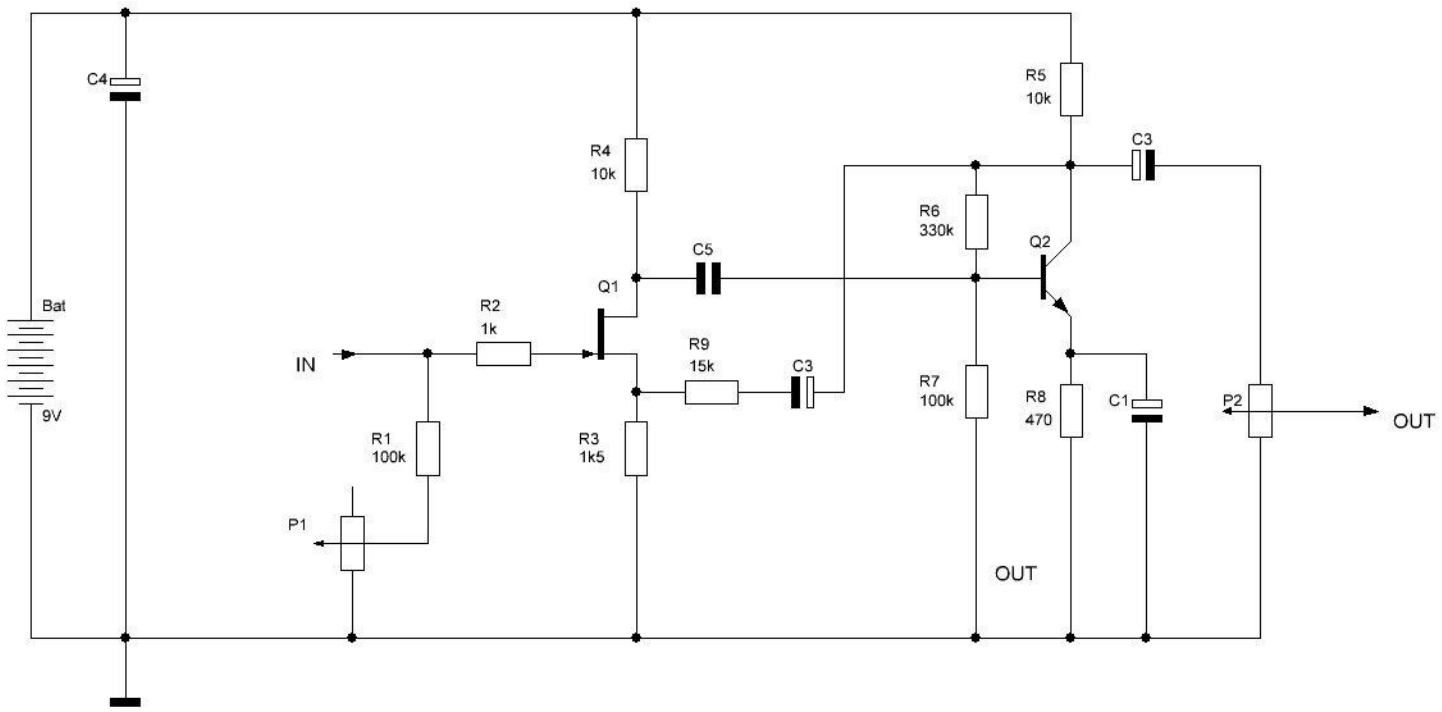
C4
Bat
9V
R4
10k
R5
10k
C3
R6
330k
Q2
C5
Q1
R2
1k
IN
R9
15k
C3
R7
100k
R8
470
C1
P2
OUT
R1
100k
R3
1k5
P1
OUT