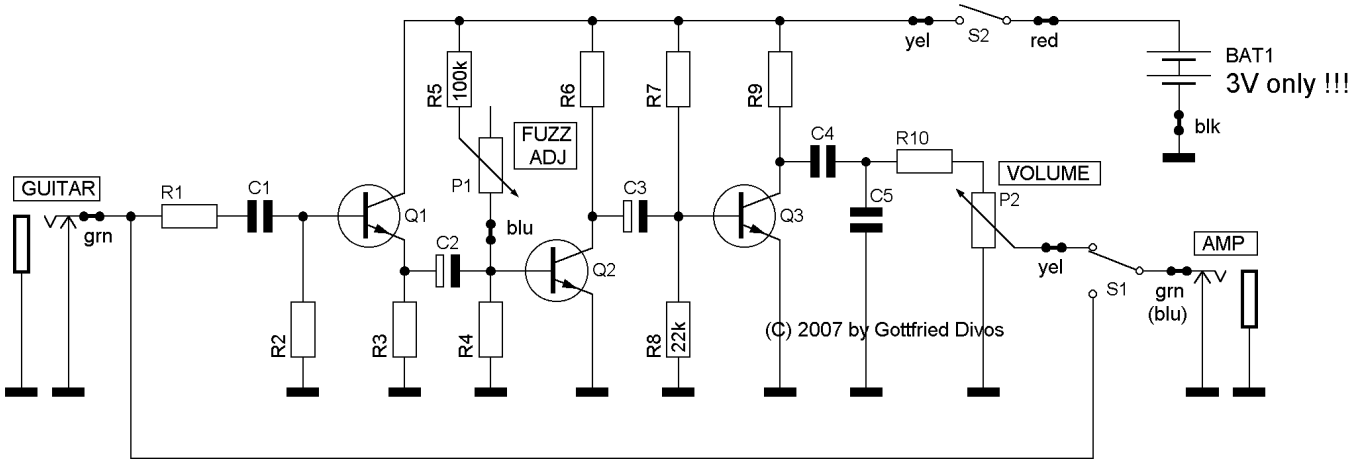

By downloading you agree not to alter this schematic, distribute it on CD/DVD or on the web or to publish it without a written permission.

Notes:
Q1 - Q3 seem to be Ge-NPN transistors (negative ground)
All capacitors are film-capacitors unless otherwise noted.
For component values have a look at the Maestro FZ-1A or the Mica Wailer schematic.
R5 is 68k on some units
R10 is not fitted on all units
P1 is 500k reverse logarithmic
Power supply is done by two 1,5V batteries

Thanks for the additional pictures from Dan N

Copyright 2007 by Gottfried Divos

Provided by www. .com

Ace Tone
Fuzz Master (FM-1)

Drawn: 26.05.2007
Version: 0.91
Sheet: 01 of 01