ACE TONE FUZZ MASTER FM-2 *Professional*

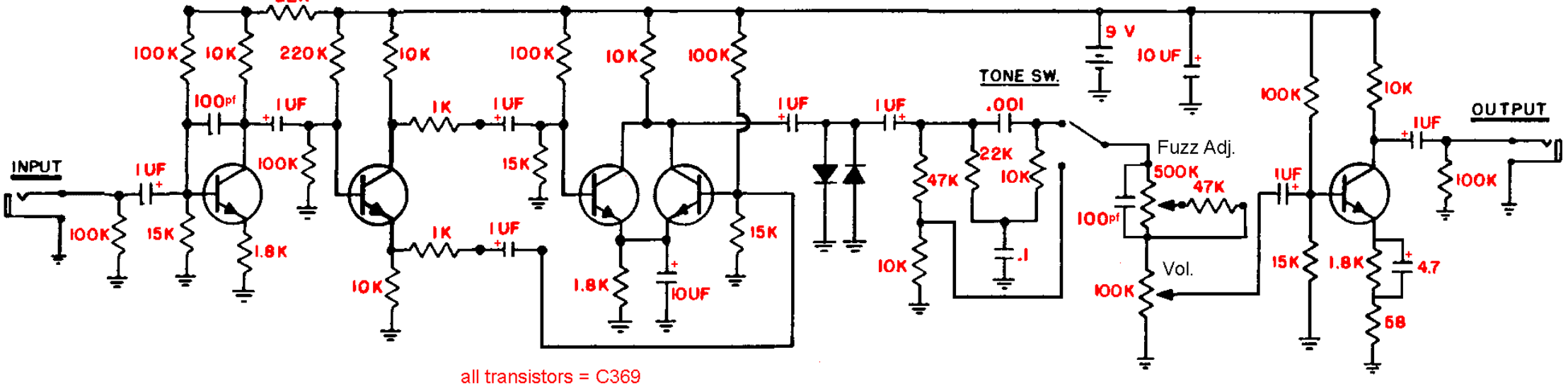

all transistors = C369
true bypass switching not shown