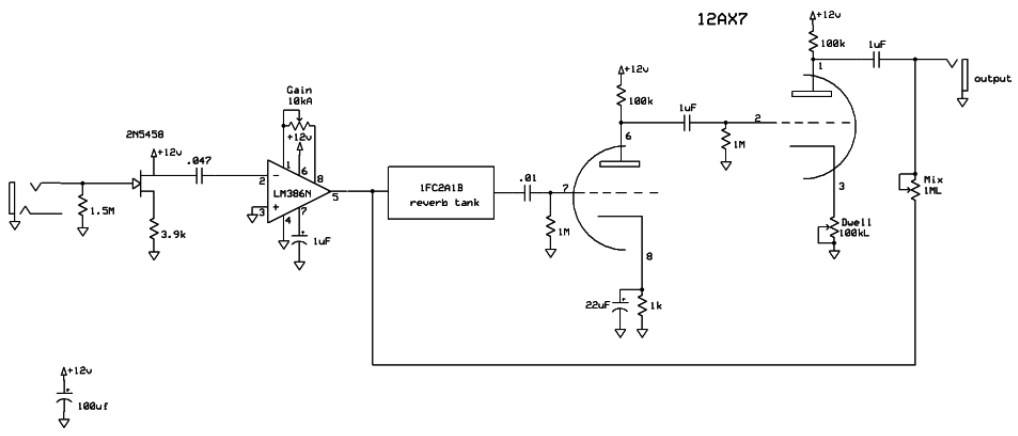


| Affectronix | | |
|---|---|---|
| Pink Verb | | |
| | Rev 1.0<br>2/8/2013 | Page 1 of 1 |