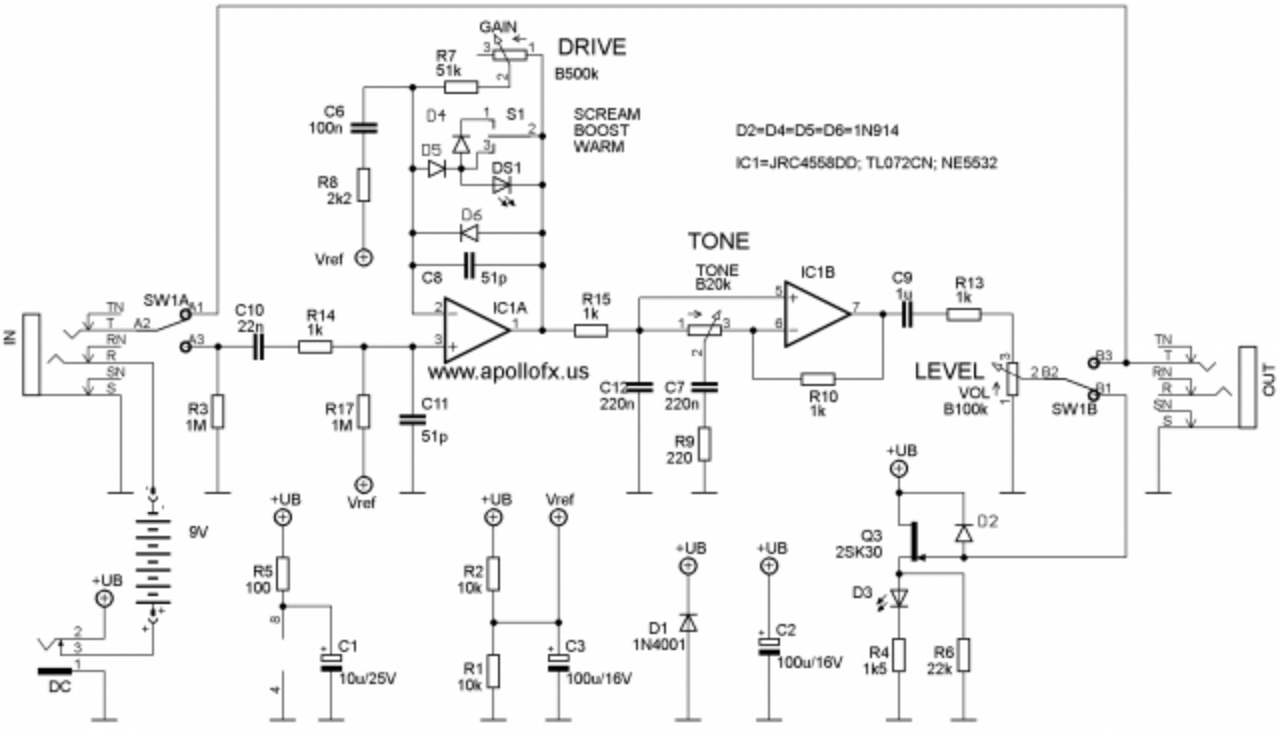AKAI Overdrive