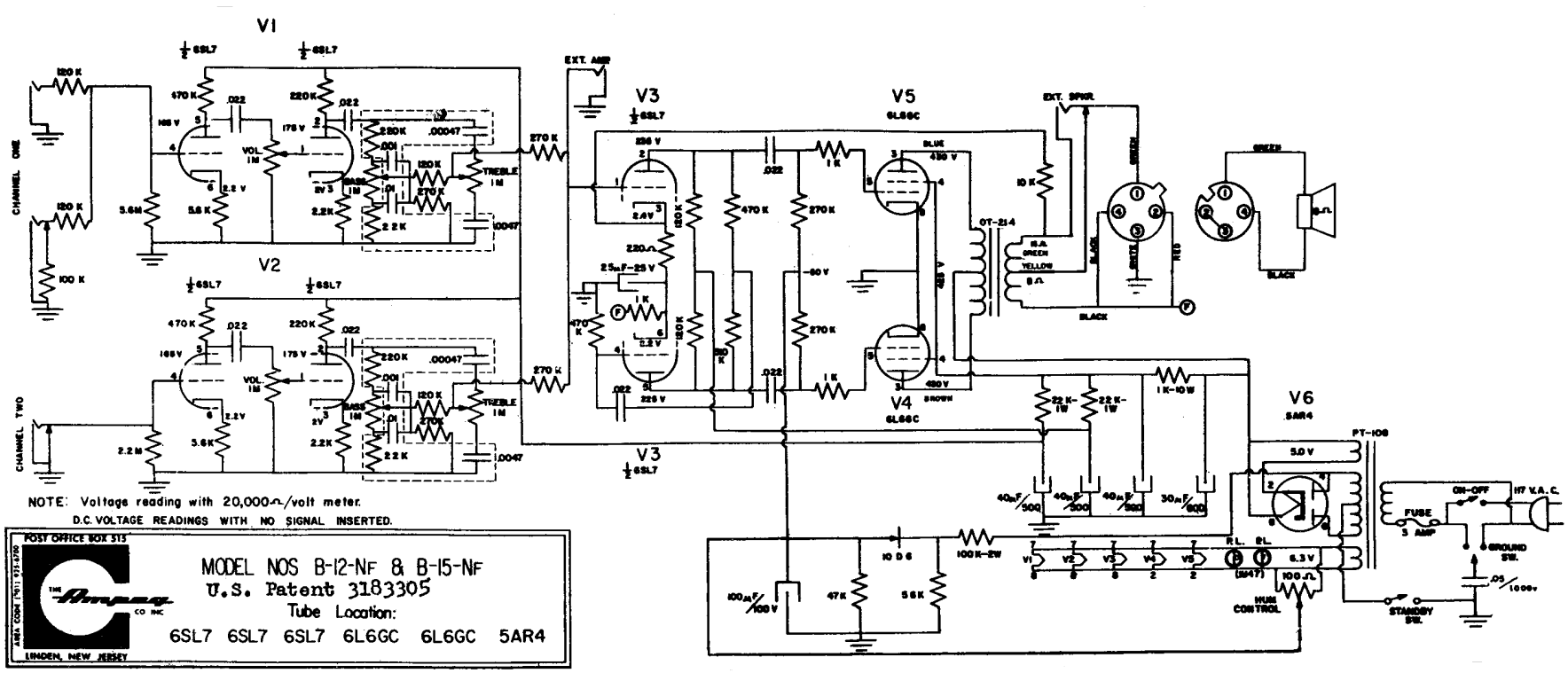
V1
½ 6SL7
½ 6SL7
V2
½ 6SL7
½ 6SL7
V3
½ 6SL7
V3
½ 6SL7
V4
6L6GC
V5
6L6GC
V6
5AR4
CHANNEL ONE
CHANNEL TWO
EXT. AMP
EXT. SPKR.
VOL 1M
BASS 1M
TREBLE 1M
OT-214
PT-108
FUSE 3 AMP
ON-OFF
117 V.A.C.
GROUND SW.
STANDBY SW.
HUM CONTROL
NOTE: Voltage reading with 20,000Ω/volt meter.
D.C. VOLTAGE READINGS WITH NO SIGNAL INSERTED.
POST OFFICE BOX 313
LINDEN, NEW JERSEY
MODEL NOS B-12-NF & B-15-NF
U.S. Patent 3183305
Tube Location:
6SL7 6SL7 6SL7 6L6GC 6L6GC 5AR4