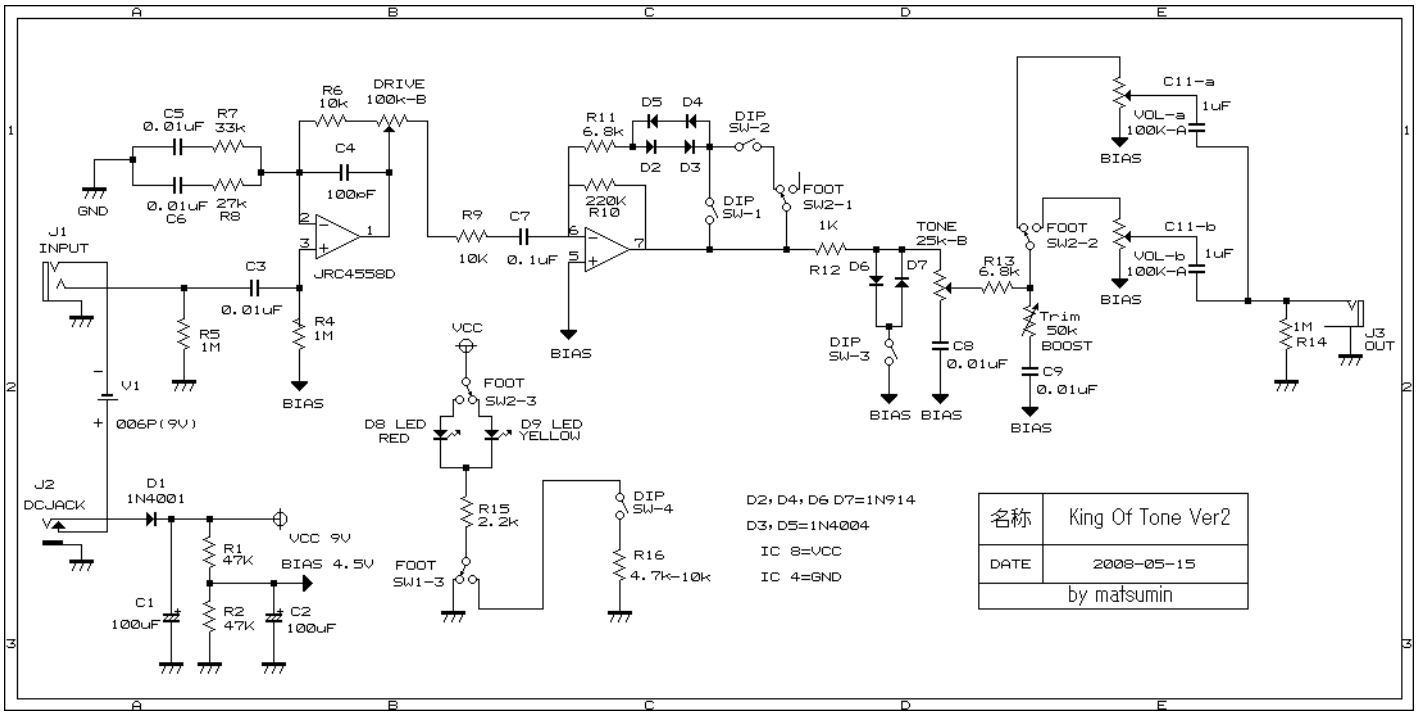
C5
0.01uF
R7
33k
C6
0.01uF
R8
27k
GND
R6
10k
DRIVE
100k-B
C4
100pF
JRC4558D
J1
INPUT
C3
0.01uF
R5
1M
R4
1M
BIAS
V1
006P(9V)
J2
DCJACK
D1
1N4001
VCC 9V
R1
47K
BIAS 4.5V
C1
100uF
R2
47K
C2
100uF
R9
10K
C7
0.1uF
R11
6.8k
220K
R10
D5
D4
D2
D3
DIP
SW-2
DIP
SW-1
FOOT
SW2-1
1K
R12
D6
D7
TONE
25k-B
DIP
SW-3
C8
0.01uF
R13
6.8k
Trim
50k
BOOST
C9
0.01uF
FOOT
SW2-2
C11-a
VOL-a
100K-A
1uF
C11-b
VOL-b
100K-A
1uF
1M
R14
J3
OUT
VCC
FOOT
SW2-3
D8 LED
RED
D9 LED
YELLOW
R15
2.2k
FOOT
SW1-3
DIP
SW-4
R16
4.7k-10k
D2, D4, D6 D7=1N914
D3, D5=1N4004
IC 8=VCC
IC 4=GND
名称
King Of Tone Ver2
DATE
2008-05-15
by matsumin