Barber Electronics LTD Silver

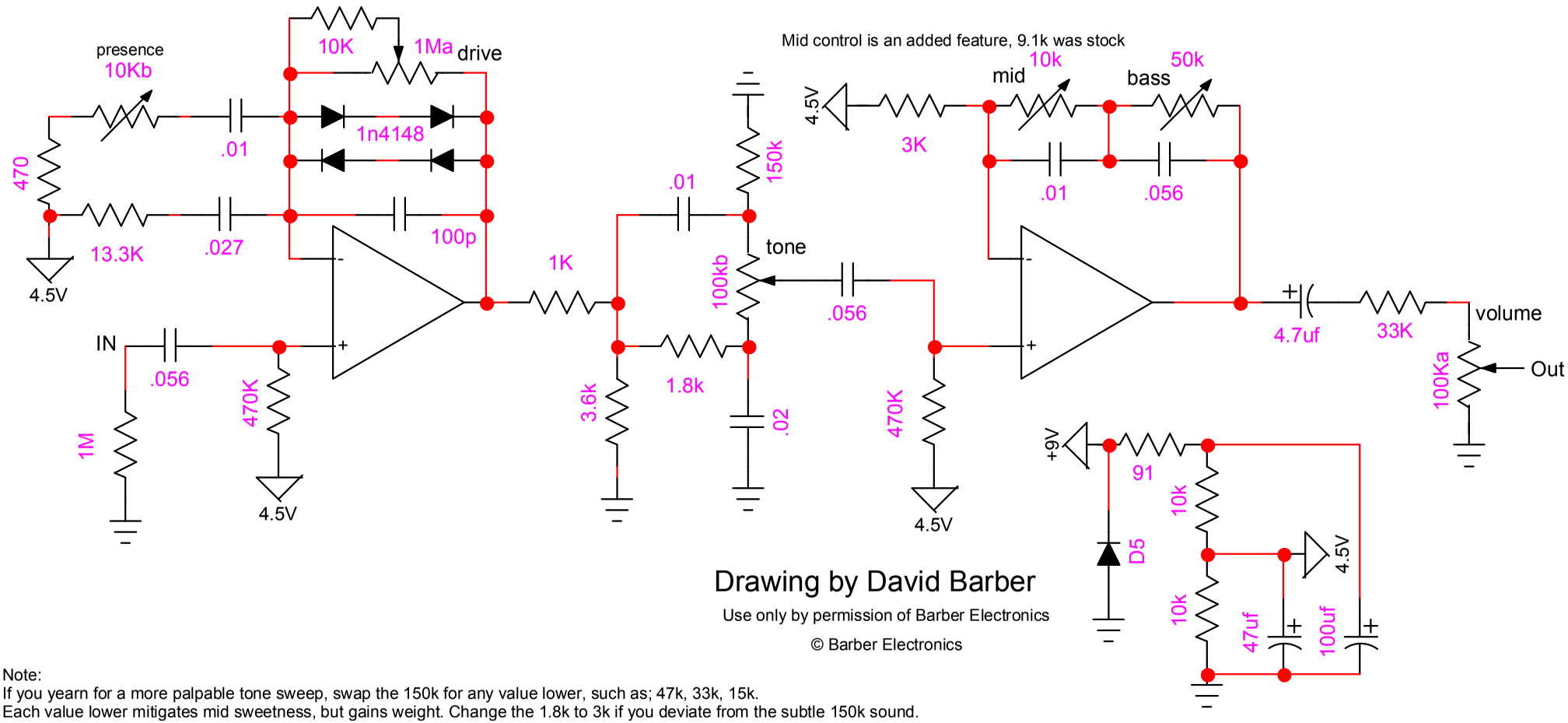

Drawing by David Barber

Use only by permission of Barber Electronics

© Barber Electronics

Note:
If you yearn for a more palpable tone sweep, swap the 150k for any value lower, such as; 47k, 33k, 15k.
Each value lower mitigates mid sweetness, but gains weight. Change the 1.8k to 3k if you deviate from the subtle 150k sound.
These changes do not make another model of the LTD, but they add to the options of the Silver LTD, and can be made to switch using a toggle.

12-18-08

www.barberelectronics.com