Basic Audio - Lucky Number
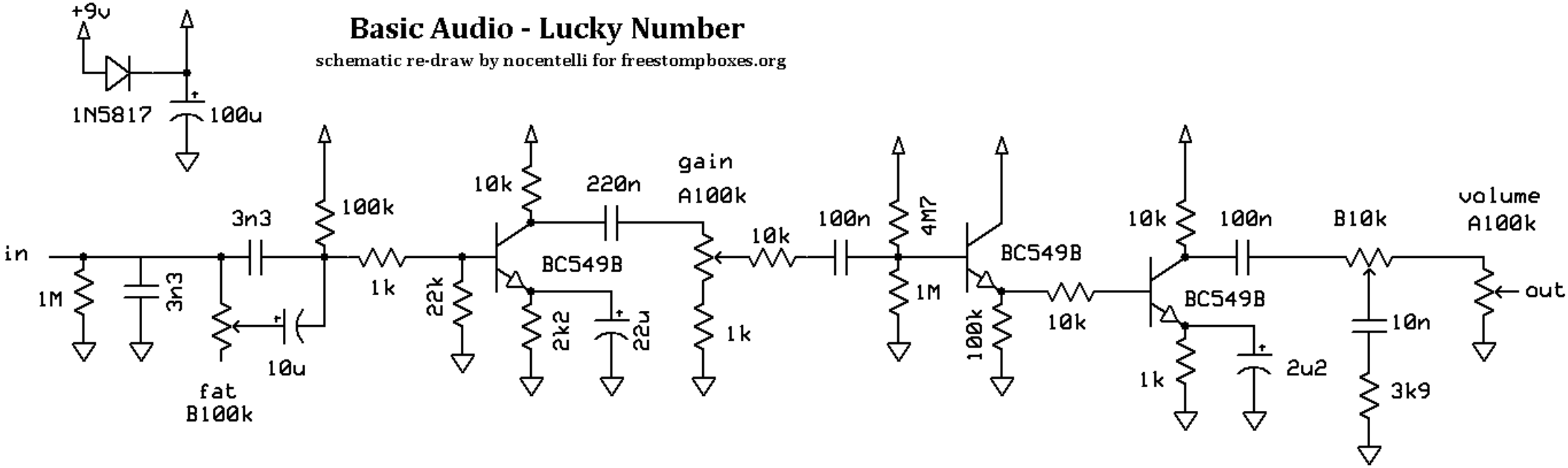
schematic re-draw by nocentelli for freestompboxes.org