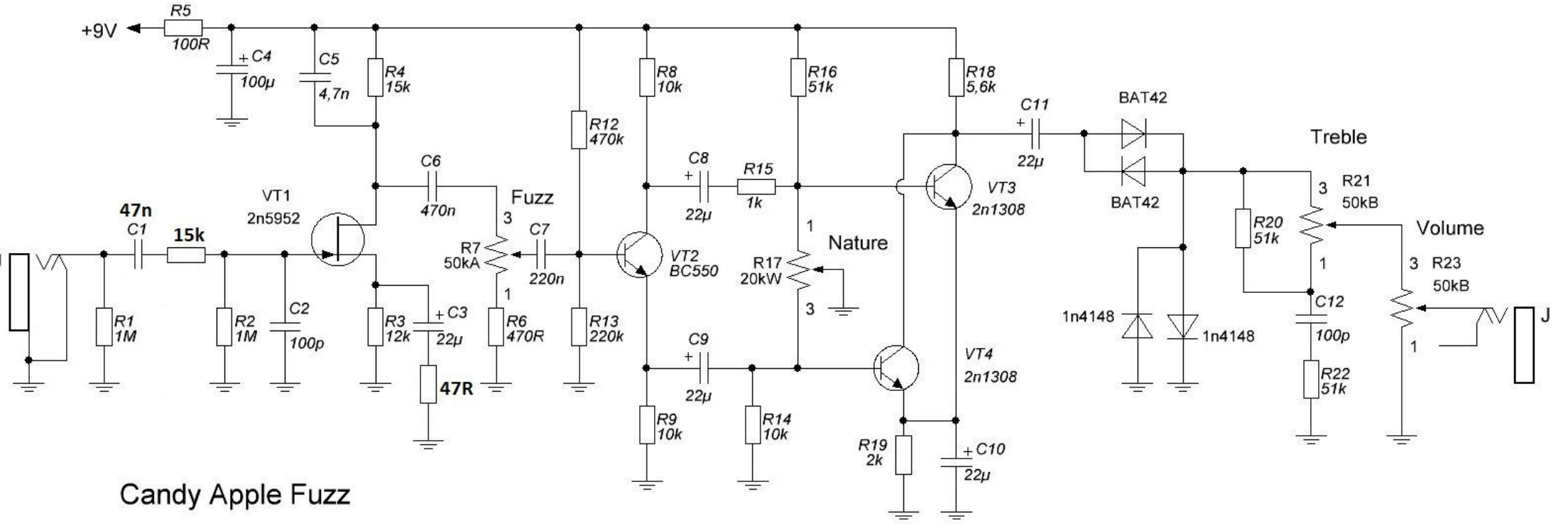

Candy Apple Fuzz