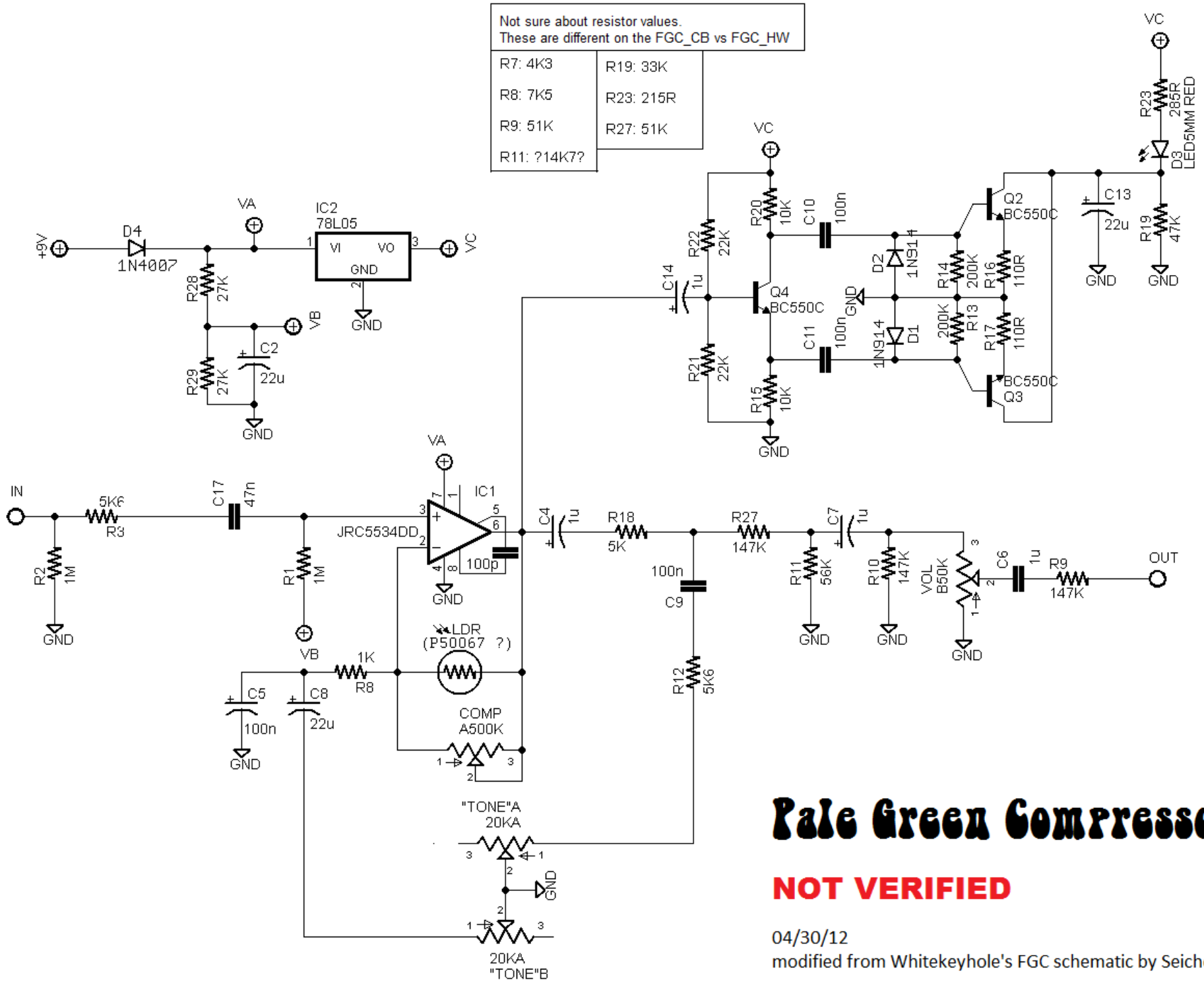

Pale Green Compressor

NOT VERIFIED

04/30/12
modified from Whitekeyhole's FGC schematic by Seiche

(c) www.freestompboxes.org