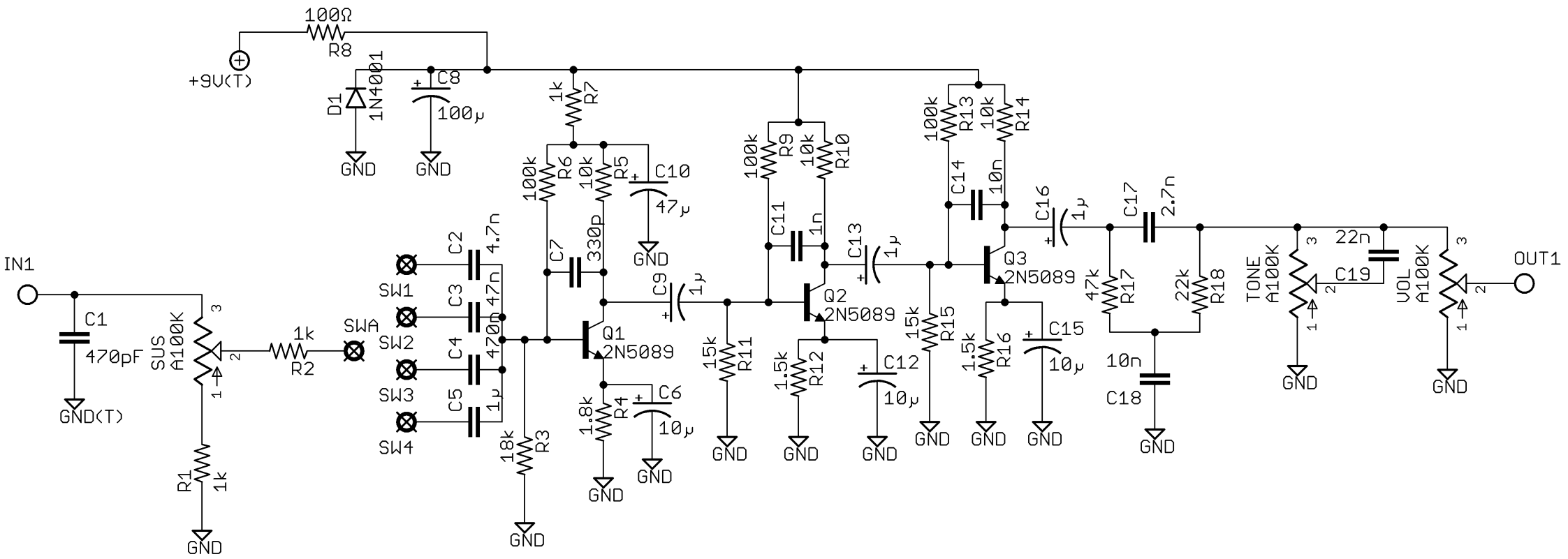
100Ω
R8
+9V(T)
D1
1N4001
C8
100µ
GND
1k
R7
100k
R6
10k
R5
C10
47µ
330p
C7
C2
4.7n
C3
47n
C4
470n
C5
1µ
SW1
SW2
SW3
SW4
SWA
IN1
C1
470pF
GND(T)
SUS
A100K
R2
1k
R1
1k
18k
R3
Q1
2N5089
1.8k
R4
C6
10µ
C9
1µ
100k
R9
10k
R10
C11
1n
Q2
2N5089
15k
R11
1.5k
R12
C12
10µ
C13
1µ
100k
R13
10k
R14
C14
10n
Q3
2N5089
15k
R15
1.5k
R16
C15
10µ
C16
1µ
C17
2.7n
47k
R17
22k
R18
10n
C18
TONE
A100K
22n
C19
VOL
A100K
OUT1