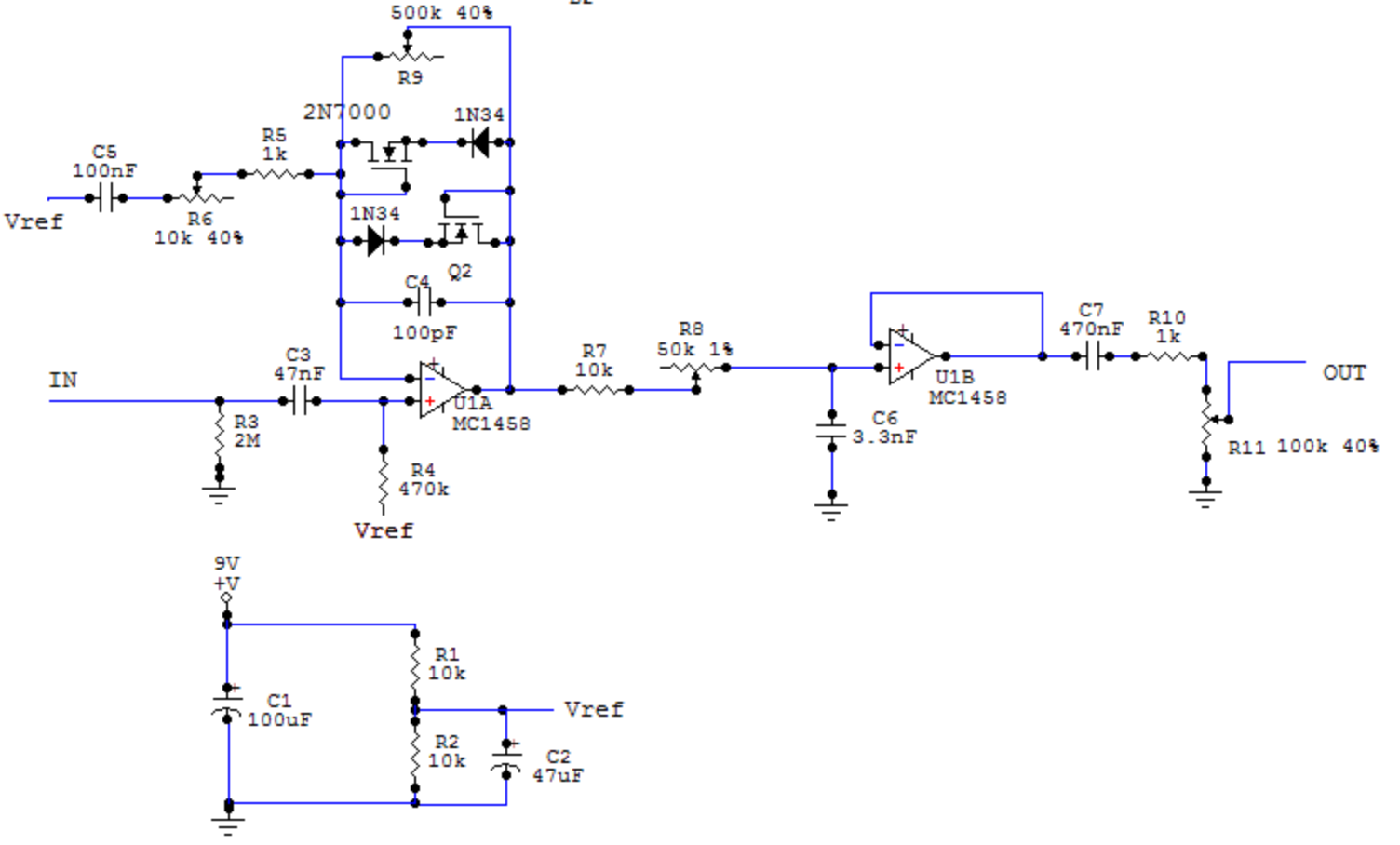
500k 40%
R9
2N7000
1N34
R5
1k
C5
100nF
Vref
R6
10k 40%
1N34
Q2
C4
100pF
IN
C3
47nF
R3
2M
U1A
MC1458
R4
470k
Vref
R7
10k
R8
50k 1%
C6
3.3nF
U1B
MC1458
C7
470nF
R10
1k
OUT
R11 100k 40%
9V
+V
C1
100uF
R1
10k
R2
10k
Vref
C2
47uF