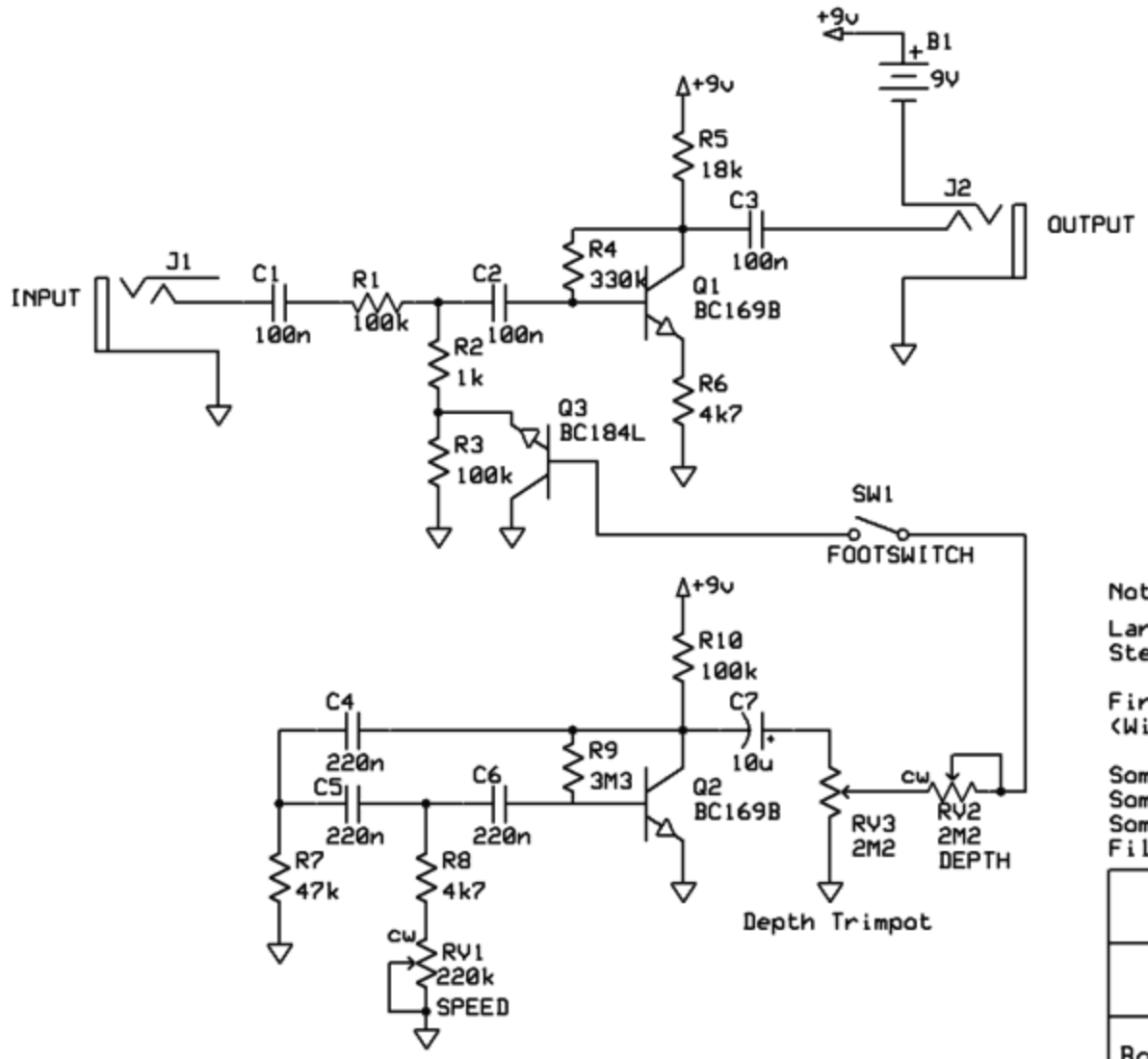

Notes:

Largely a corrected version of
Stephen Giles' 2002/02/02 schematic

First version. Narrow Box only. 3 transistors.
(Wide box and re-issues use second version. 4 Transistors.)

Some units Q3 may be BC169B
Some units C7 may be 4u7
Some unit RV3 replaced with single 1M1 (series?)
Film caps, except C7.

Colorsound		Unverified
Tremolo Version 1 (1973 to 1975)		
Bob Warble	Dwg Rev 1.0 2019/03/25	Page 1 of 1

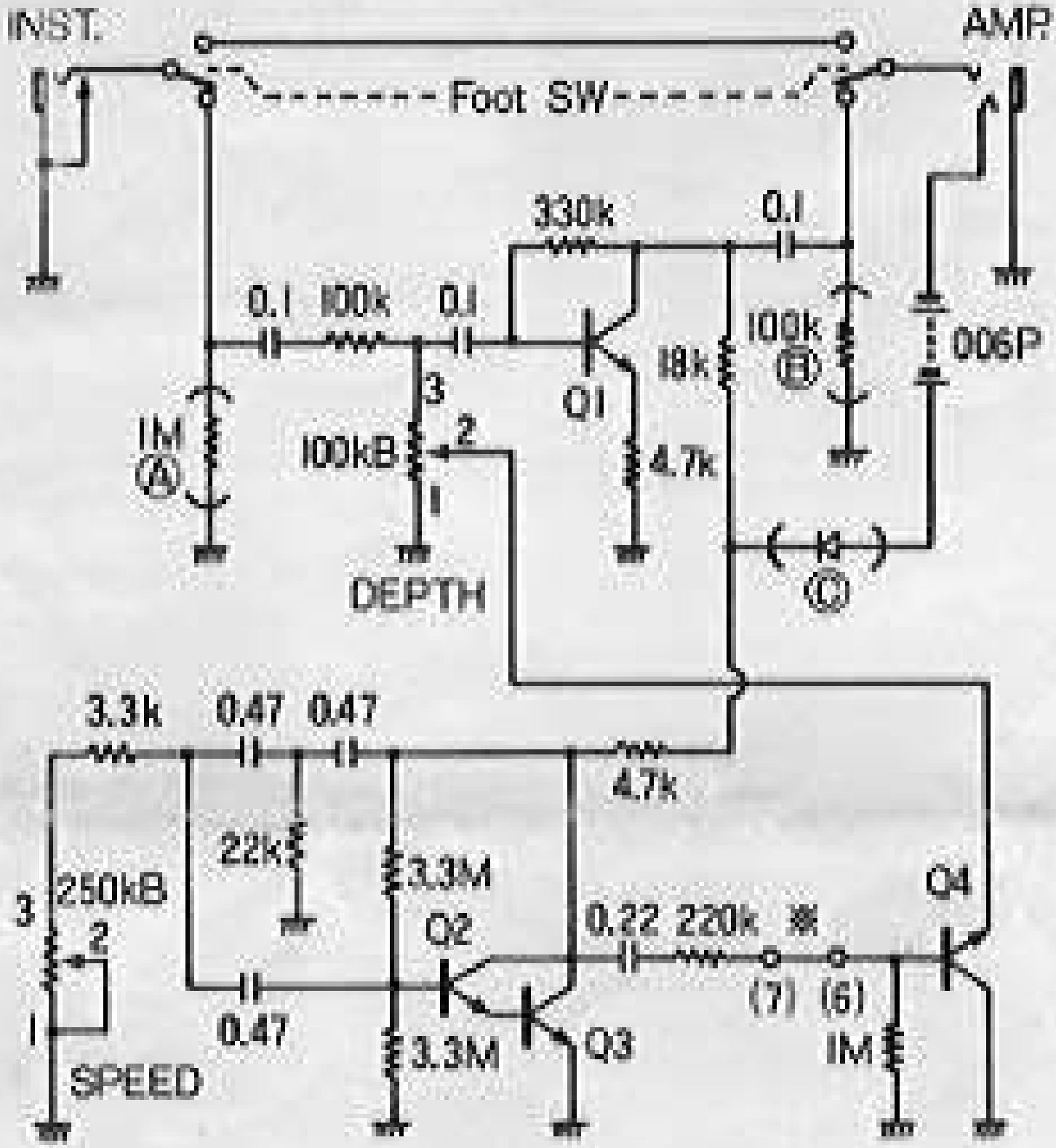
INST.
AMP.
Foot SW
330k
0.1
0.1
100k
0.1
100k
Ⓑ
006P
18k
Q1
3
2
1
1M
Ⓐ
100kB
4.7k
DEPTH
Ⓒ
3.3k
0.47
0.47
4.7k
22k
3.3M
250kB
3
2
1
Q2
0.22
220k
※
Q4
(7)
(6)
0.47
3.3M
Q3
1M
SPEED

Q1～4は, 2SC945