Octave-Doubling Fuzz

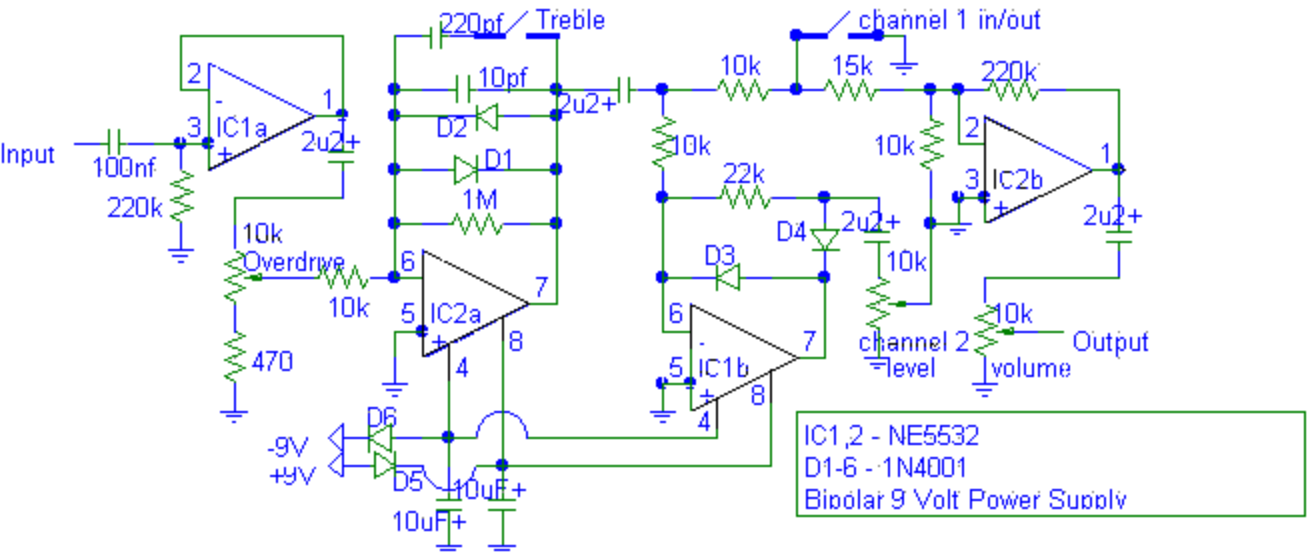

Drawn by Justin Philpott 10-97