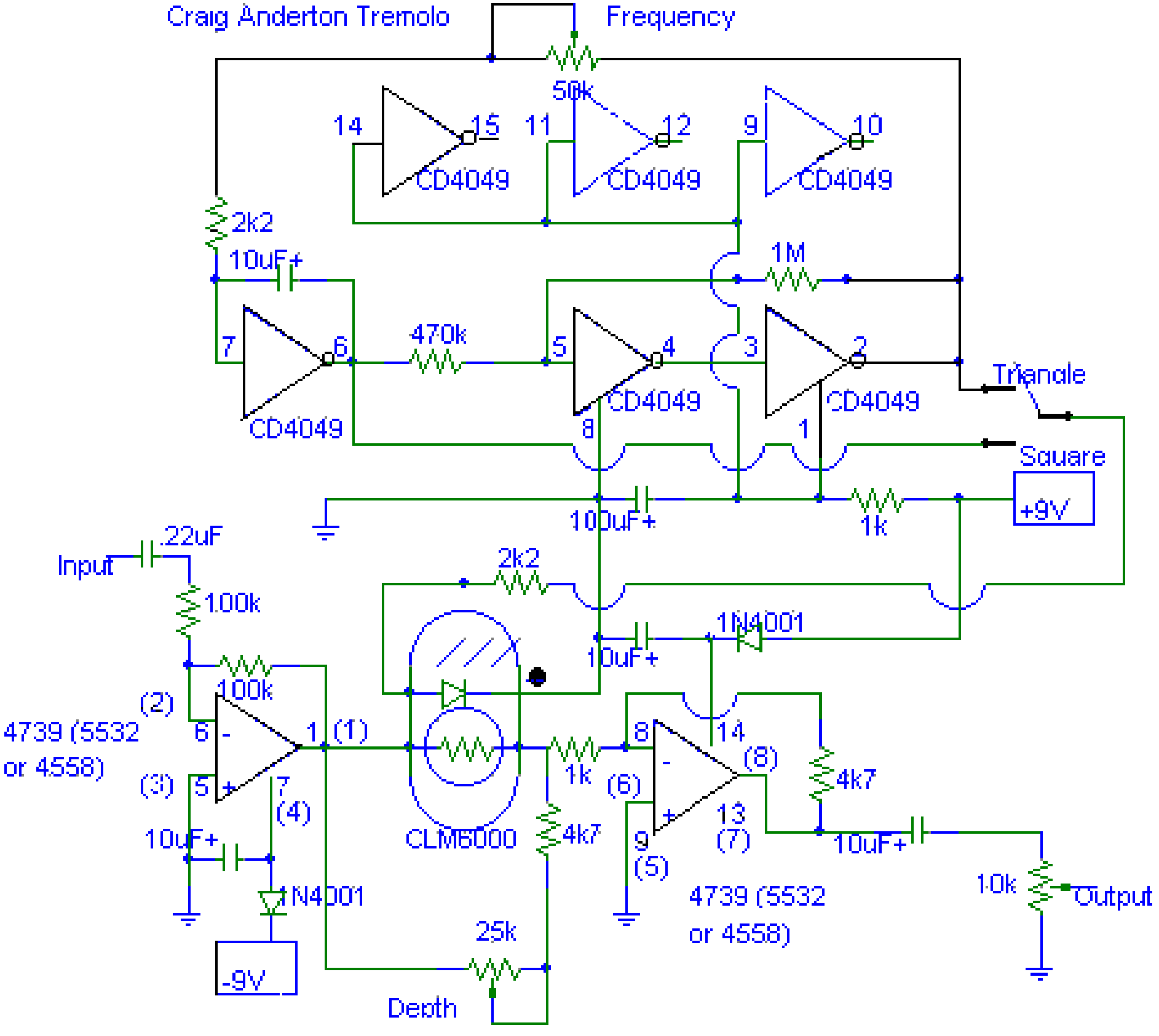
Craig Anderton Tremolo
Frequency
50k
14
15
11
12
9
10
CD4049
CD4049
CD4049
2k2
10uF+
1M
7
6
470k
5
4
3
2
CD4049
CD4049
CD4049
Triangle
8
1
Square
10uF+
1k
+9V
.22uF
Input
100k
2k2
1N4001
10uF+
100k
(2)
4739 (5532
or 4558)
6
1
(1)
(3)
5
7
(4)
10uF+
CLM6000
1k
4k7
8
14
(8)
(6)
13
(7)
9
(5)
4k7
10uF+
1N4001
4739 (5532
or 4558)
10k
Output
25k
-9V
Depth