Differential Audio Manifestationz

FZ-781 J-TYPE FUZZ

for educational purposes only!

Input
Output
Fuzz 1K Lin
Filter 100K Lin
Level 100K Log
F.A.C.
Q2 E B C
5600pF
10nF
10K
4,7uF
10K
100nF
10uF
100K
47K
470Ω
8,2K
5600pF
15nF
25nF
56nF
47uF
100Ω
E B C Q1
E B C Q3
D1
4,7K

Transistors are Mullard OC82DM (PNP Ge)
Cap values are not confirmed

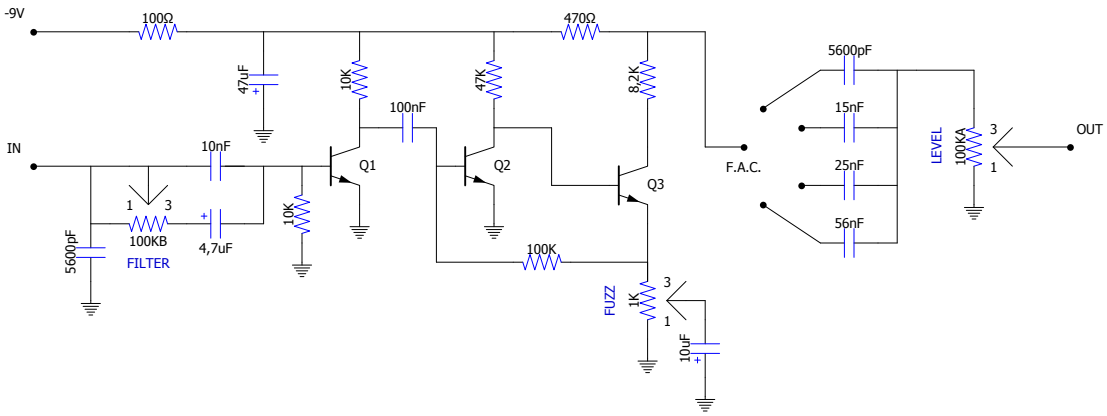

b.man
02/2013