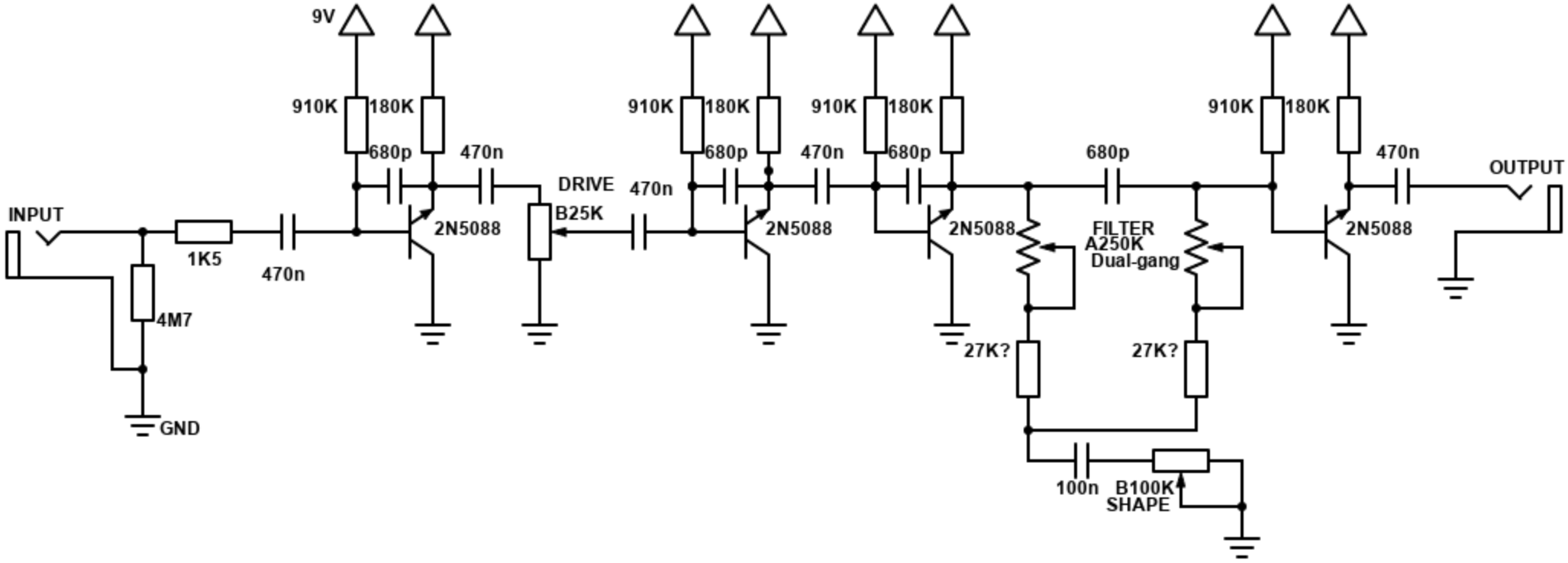
9V
910K
180K
680p
470n
DRIVE
B25K
470n
910K
180K
680p
470n
910K
180K
680p
680p
910K
180K
470n
OUTPUT
INPUT
1K5
470n
2N5088
2N5088
2N5088
FILTER
A250K
Dual-gang
2N5088
4M7
27K?
27K?
GND
100n
B100K
SHAPE

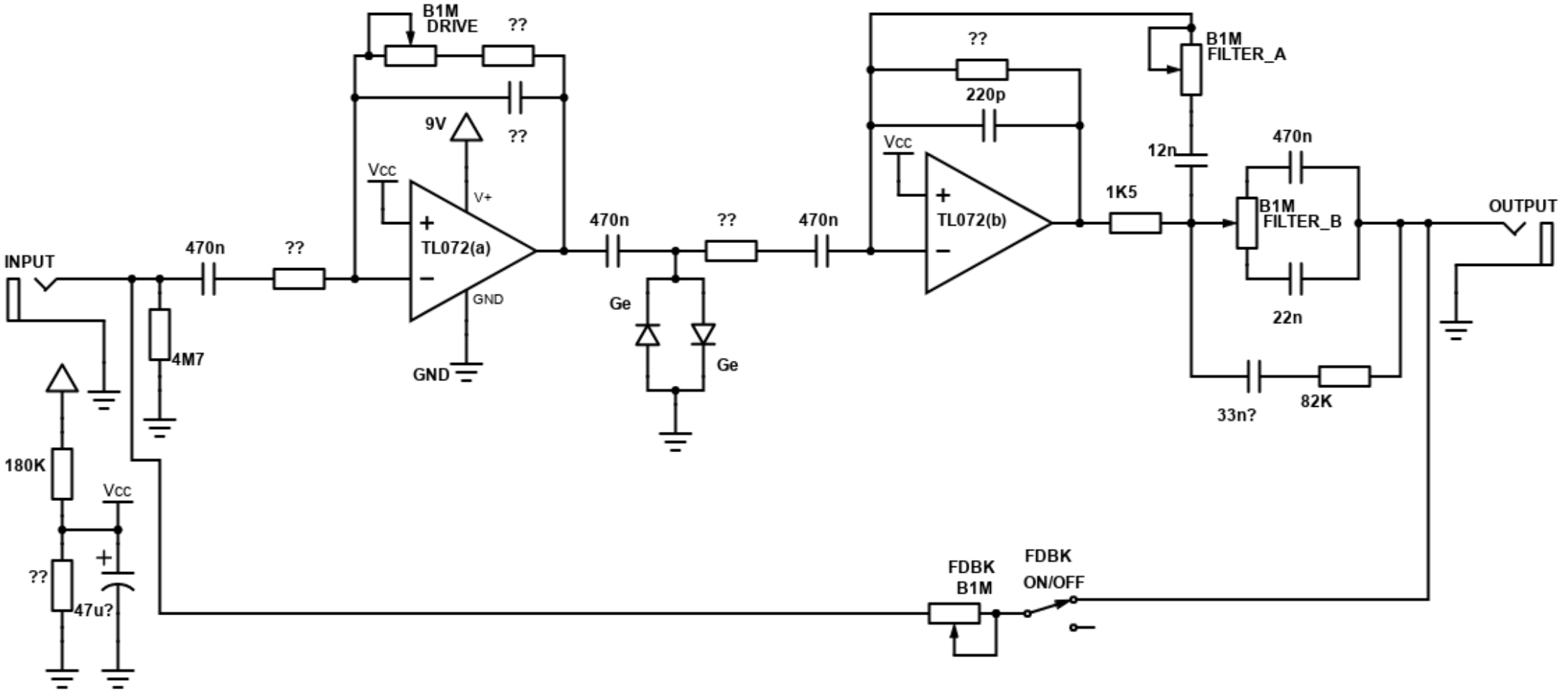
B1M
DRIVE
??
??
9V
??
Vcc
V+
TL072(a)
GND
GND
INPUT
470n
??
4M7
470n
??
470n
Ge
Ge
??
220p
Vcc
TL072(b)
B1M
FILTER_A
12n
1K5
470n
B1M
FILTER_B
22n
33n?
82K
OUTPUT
180K
Vcc
??
47u?
FDBK
B1M
FDBK
ON/OFF