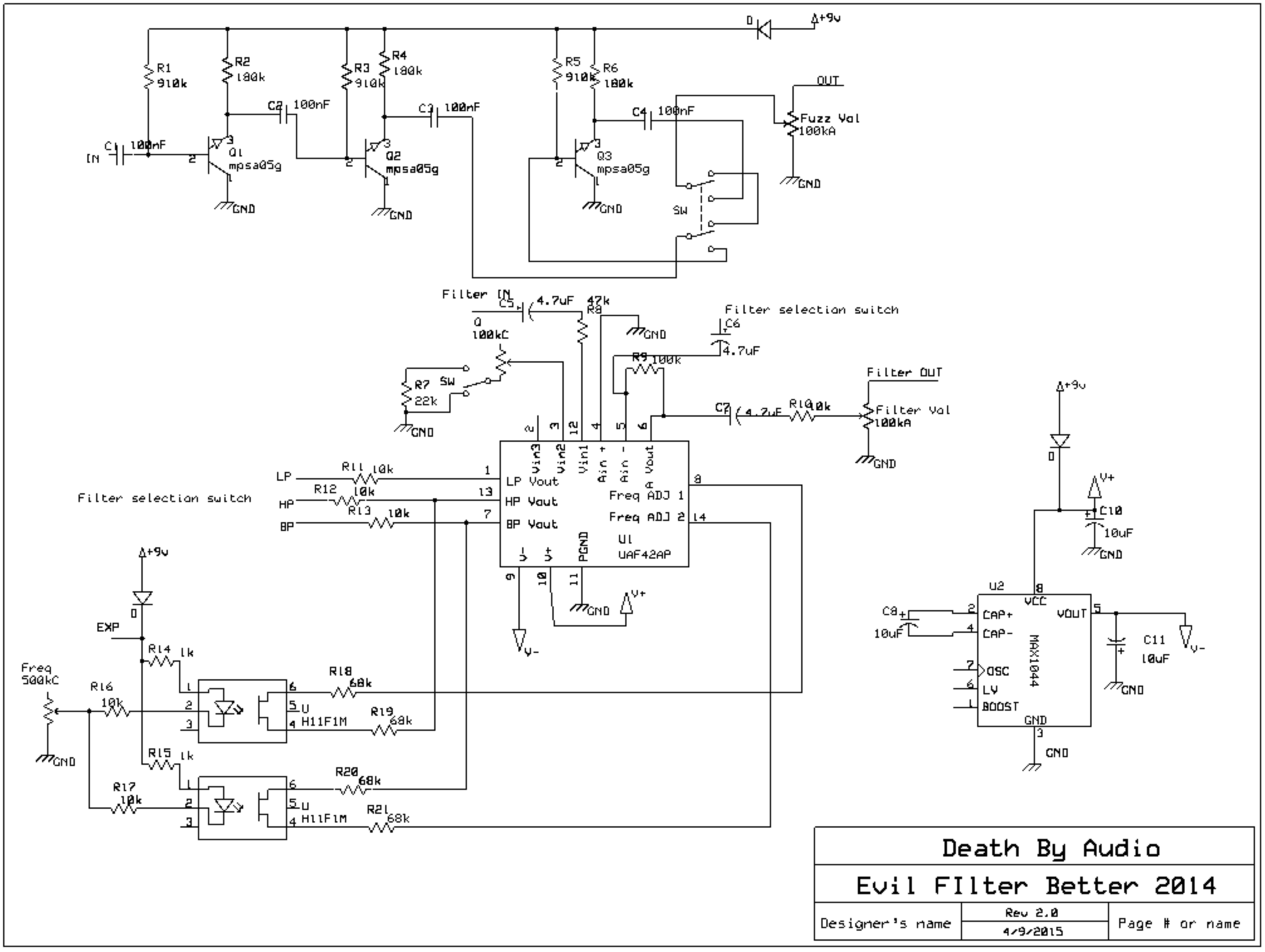
+9v
D
R1 910k
R2 180k
R3 910k
R4 180k
R5 910k
R6 180k
C1 100nF
C2 100nF
C3 100nF
C4 100nF
IN
Q1 mpsa05g
Q2 mpsa05g
Q3 mpsa05g
GND
OUT
Fuzz Val 100kA
SW
Filter IN
C5 4.7uF
R8 47k
Q 100kC
Filter selection switch
C6 4.7uF
R9 100k
R7 22k
Filter OUT
C7 4.7uF
R10 10k
Filter Val 100kA
LP
HP
BP
R11 10k
R12 10k
R13 10k
LP Vout
HP Vout
BP Vout
Vin3
Vin2
Vin1
Ain +
Ain -
A Vout
Freq ADJ 1
Freq ADJ 2
PGND
U1 UAF42AP
V+
V-
EXP
R14 1k
R15 1k
R16 10k
R17 10k
Freq 500kC
R18 68k
R19 68k
R20 68k
R21 68k
U H11F1M
C10 10uF
U2
VCC
CAP+
CAP-
OSC
LV
BOOST
VOUT
MAX1044
C8 10uF
C11 10uF
Death By Audio
Evil FIlter Better 2014
Designer's name
Rev 2.0
4/9/2015
Page # or name