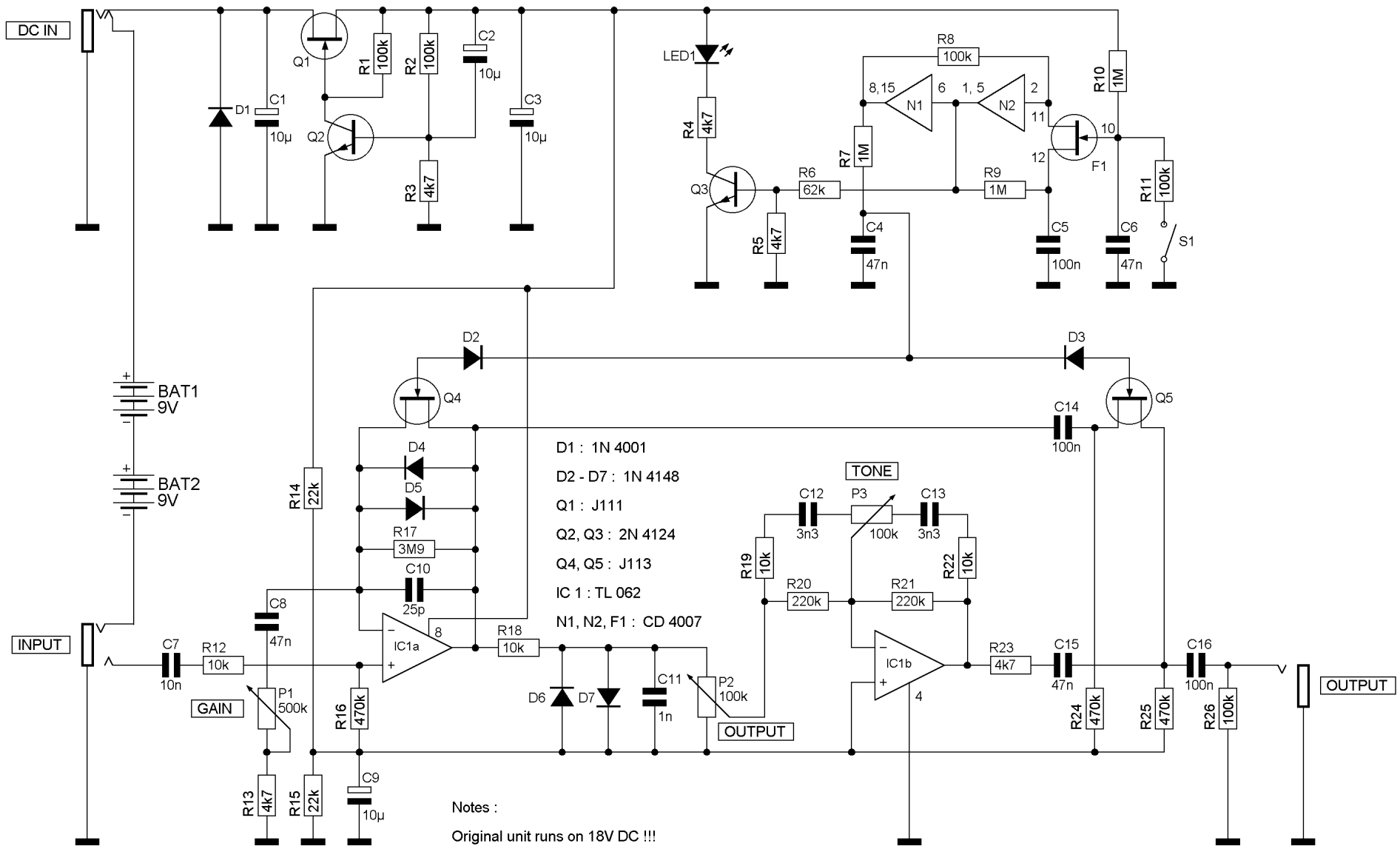


Notes :

Original unit runs on 18V DC !!!

P1 should be a neg. log., P2 log. and P3 lin. type

Copyright 2003 by Gottfried Divos

Provided by www.Anubics.com

DOD

555 Distortion

Drawn: 14.12.2003

Version: 1.0

Sheet: 01 of 01