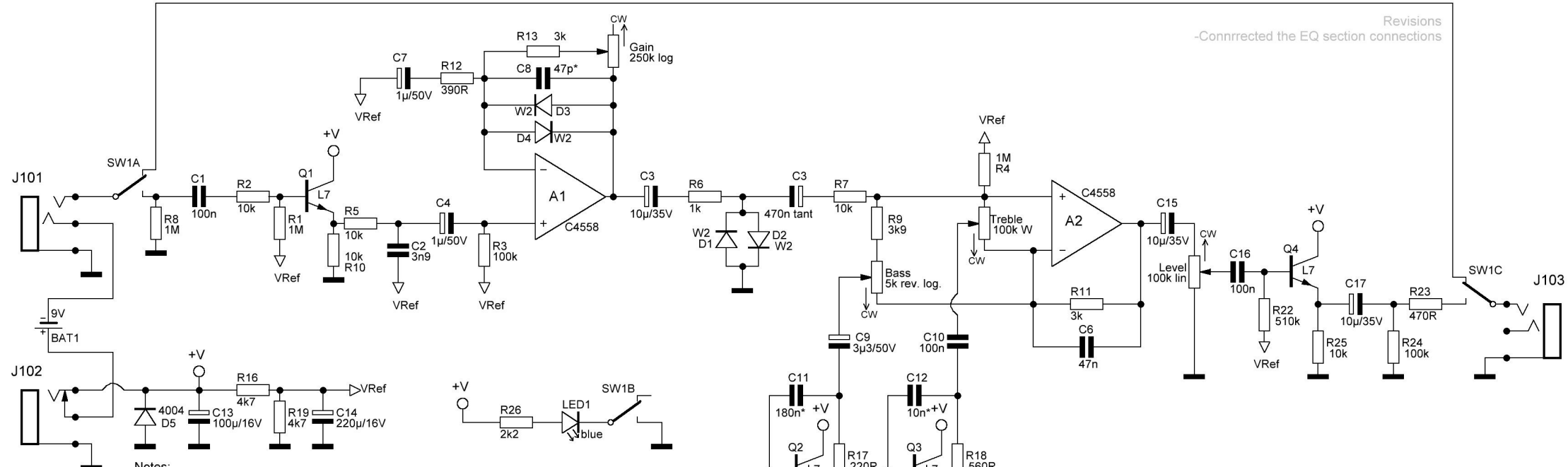

Notes:
-This schematic may contain errors and is subject to change without prior notice
-Traced from unit with serial number 8032045317
-Main board marked PCB-CD-1-01R1 0808A, connection board PCB-COOLCAT-02R1 0808C
-Component numbering according to PCB(s)
-C8, C11 & C12 are measured on circuit, values based on educated guesses
-All transistors are marked L7 (2SC1623 or similar, ~200 Hfe)
-D1-D4 are marked W2 (probably standard Si small signal diodes)