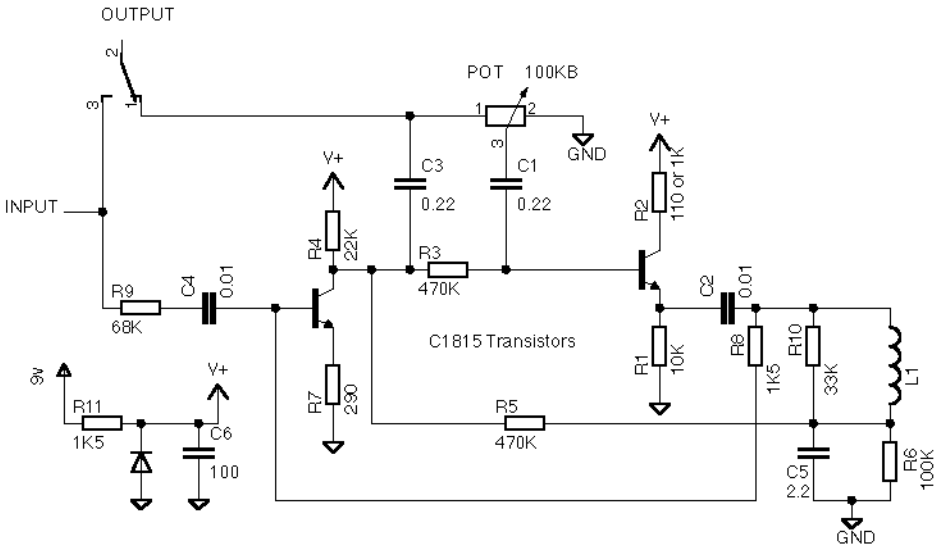
OUTPUT
POT 100KB
GND
V+
C3
0.22
C1
0.22
INPUT
R4
22K
R3
470K
R2
110 or 1K
R9
68K
C4
0.01
C2
0.01
C1815 Transistors
R1
10K
R8
1K5
R10
33K
L1
9v
R11
1K5
C6
100
R7
290
R5
470K
C5
2.2
R6
100K
GND