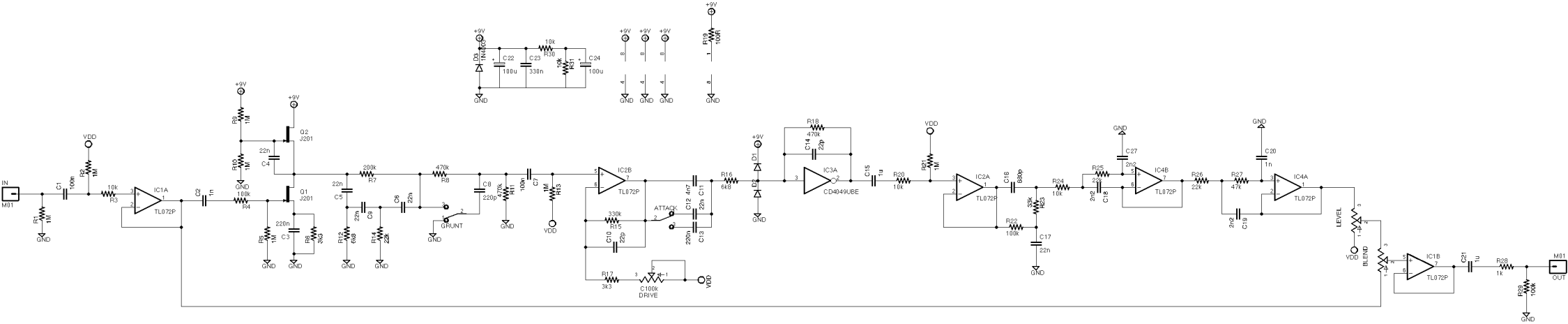
IN
M01
R1 1M
GND
C1 100n
VDD
R2 1M
10k R3
IC1A TL072P
C2 1n
+9V
R9 1M
R10 1M
100k R4
Q2 J201
Q1 J201
22n C4
220n C3
R5 1M
R6 4k7
280k R7
22n C5
22n C6
R12 6k8
R14 22k
470k R8
22n C8
GRUNT
220p
R11 100k
C7 100n
1M R13
IC2B TL072P
330k R15
C10 22p
R17 3k3
C100k DRIVE
ATTACK
C12 4n7
C11 22n
220n C12
R16 6k8
D1
D2
R18 470k
C14 22p
IC3A CD4049UBE
C15 1u
R20 10k
R21 1M
IC2A TL072P
C16 680p
R22 100k
33k R23
C17 22n
R24 10k
R25 22k
2n2 C18
C27 2n2
IC4B TL072P
R26 22k
R27 47k
2n2 C19
C20 1n
IC4A TL072P
LEVEL
BLEND
1k
IC1B TL072P
C21 1u
R28 1k
R29 100k
M01
OUT
D3 1N4148
C22 100u
C25 330n
10k R30
10k R31
C24 100u
R19 10kR
8
4