Dr J (Joyo) D55 Aerolite Compressor

Schematic by mysticwhiskey for freestompboxes.org
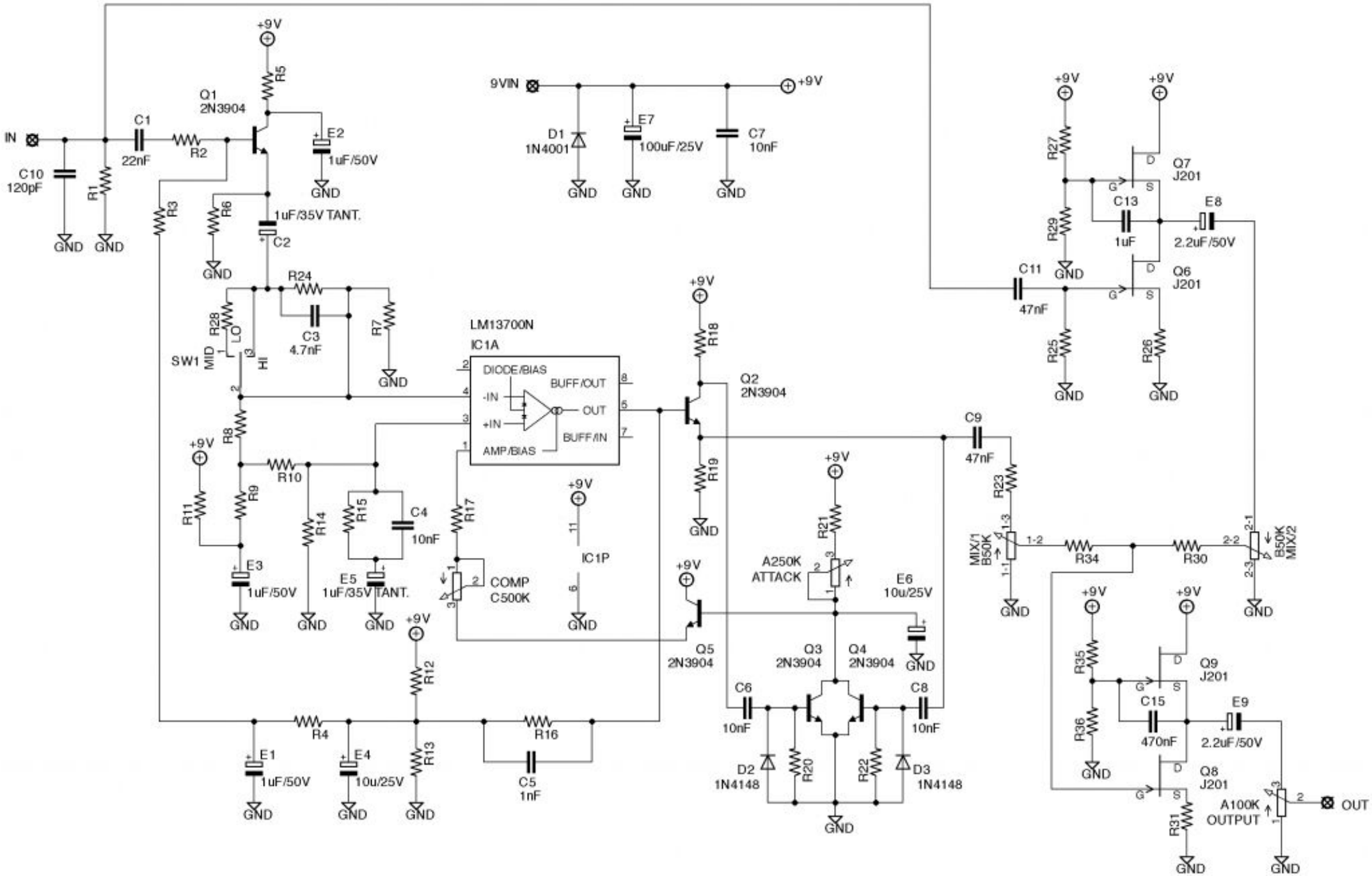
Version 0.1, December 28 2013