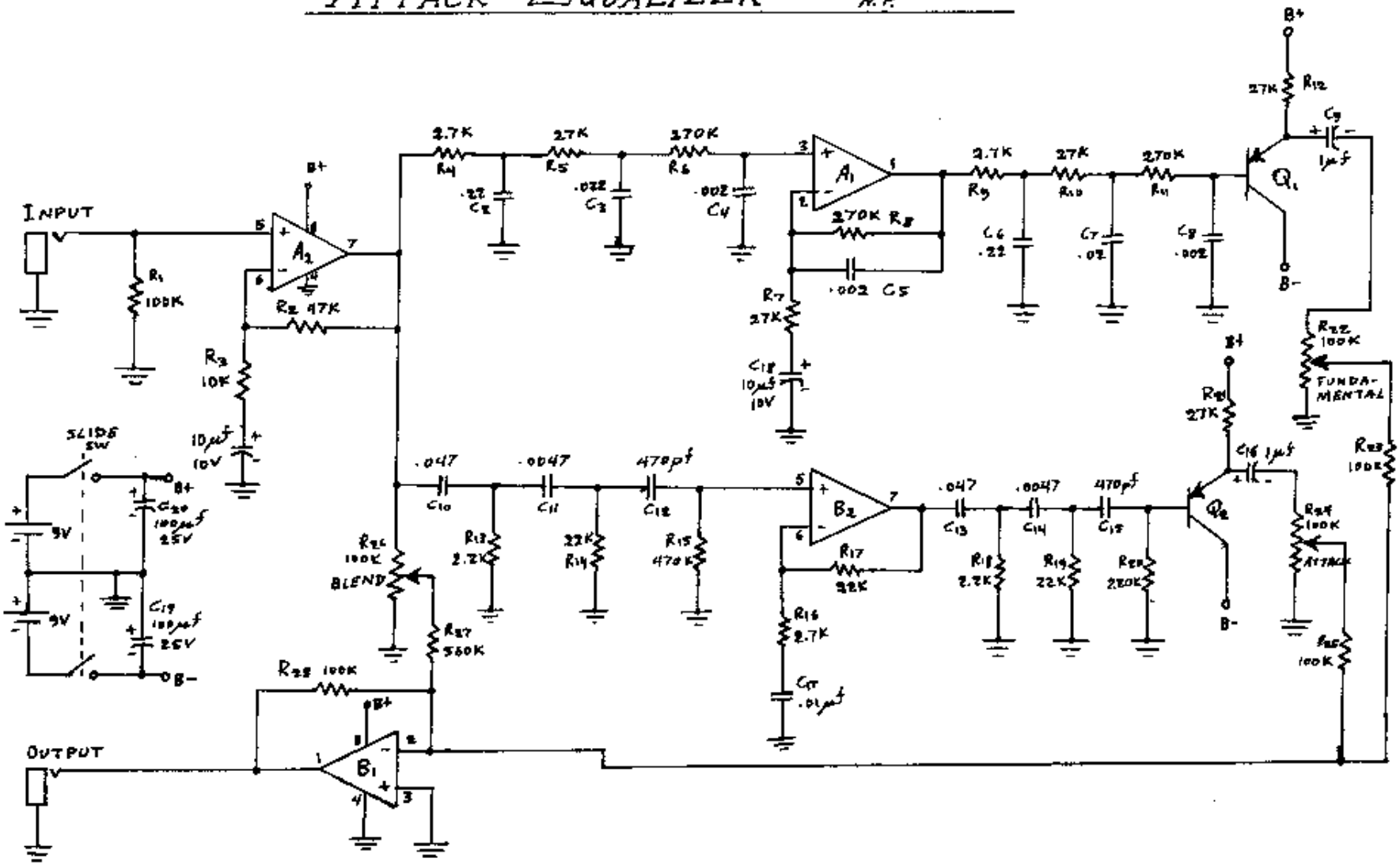ATTACK EQUALIZER N.P.