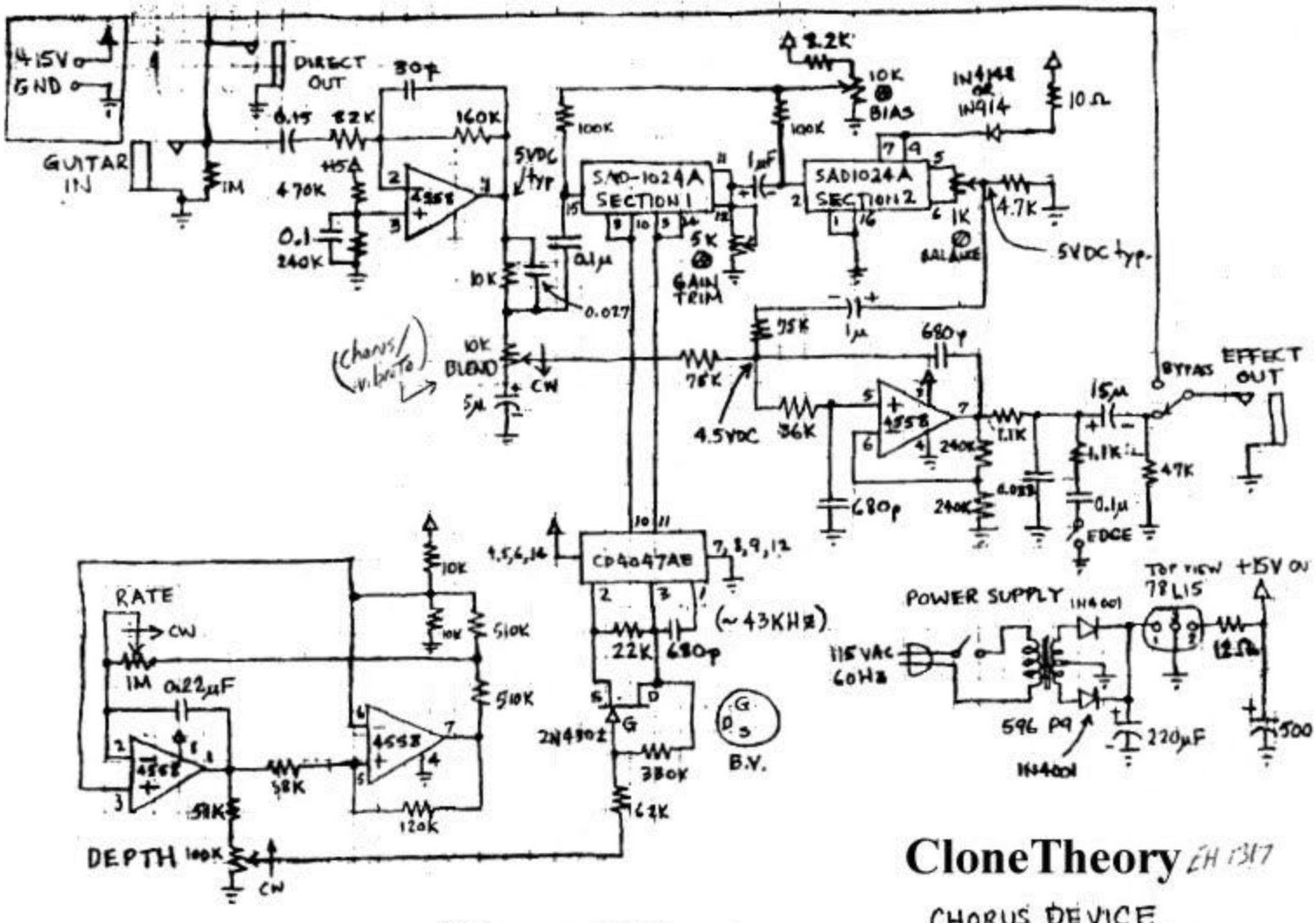

CloneTheory

EH 1317

CHORUS DEVICE
E. Cooper 6/21/77
FINAL VERSION 10/27/77

Chorus/Vibrato