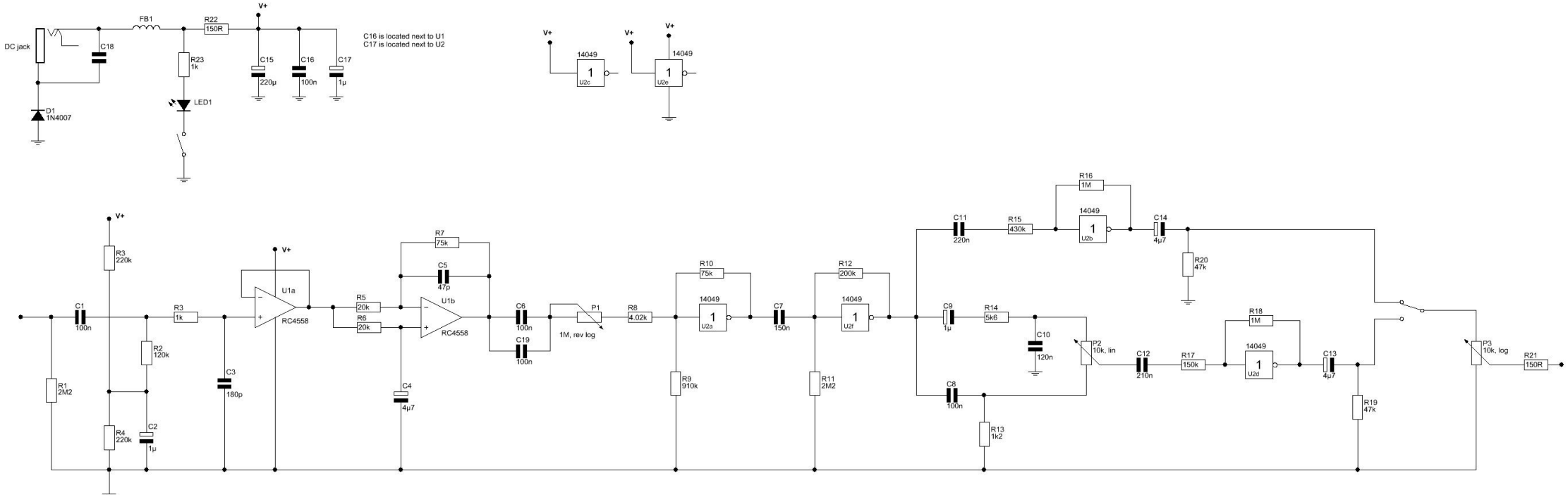
DC jack
C18
FB1
R22
150R
V+
R23
1k
LED1
D1
1N4007
C15
220µ
C16
100n
C17
1µ
C16 is located next to U1
C17 is located next to U2
14049
U2c
U2e
U2b
U2a
U2f
U2d
R3
220k
R2
120k
R4
220k
C2
1µ
C1
100n
R1
2M2
R3
1k
C3
180p
U1a
RC4558
R5
20k
R6
20k
R7
75k
C5
47p
U1b
C4
4µ7
C6
100n
C19
100n
P1
1M, rev log
R8
4.02k
R10
75k
R9
910k
C7
150n
R12
200k
R11
2M2
C11
220n
R15
430k
R16
1M
C14
4µ7
R20
47k
C9
1µ
R14
5k6
C10
120n
P2
10k, lin
C8
100n
R13
1k2
C12
210n
R17
150k
R18
1M
C13
4µ7
R19
47k
P3
10k, log
R21
150R