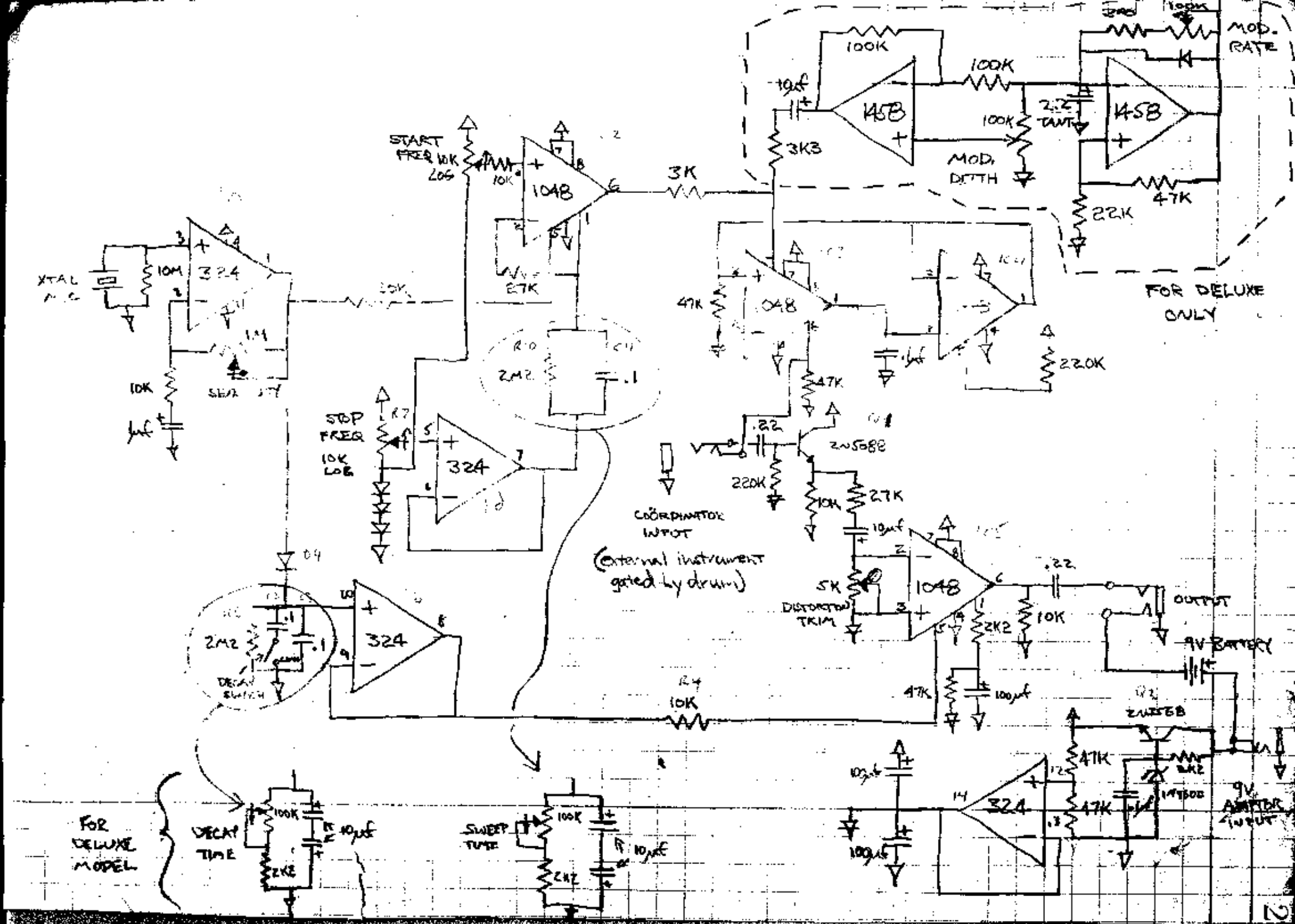
XTAL
10M
324
10K
START FREQ 10K LOG
10K
1048
27K
3K
STOP FREQ 10K LOG
324
2M2
.1
DECAY SWITCH
324
10K
100K
19µf
3K3
1458
100K
100K
MOD. DEPTH
2.2 TANT
1458
MOD. RATE
47K
22K
FOR DELUXE ONLY
47K
1048
1µf
220K
47K
.22
2N5088
220K
10K
27K
10µf
COÖRDINATOR INPUT
(external instrument gated by drum)
5K
DISTORTION TRIM
1048
.22
10K
2K2
OUTPUT
9V BATTERY
47K
100µf
10K
2N1308
47K
1N5000
9V AMPLIFIER INPUT
FOR DELUXE MODEL
DECAY TIME
100K
10µf
2K2
SWEEP TIME
100K
10µf
2K2
100µf
100µf
324
47K
47K