PedalPCB.com

Organ Donor

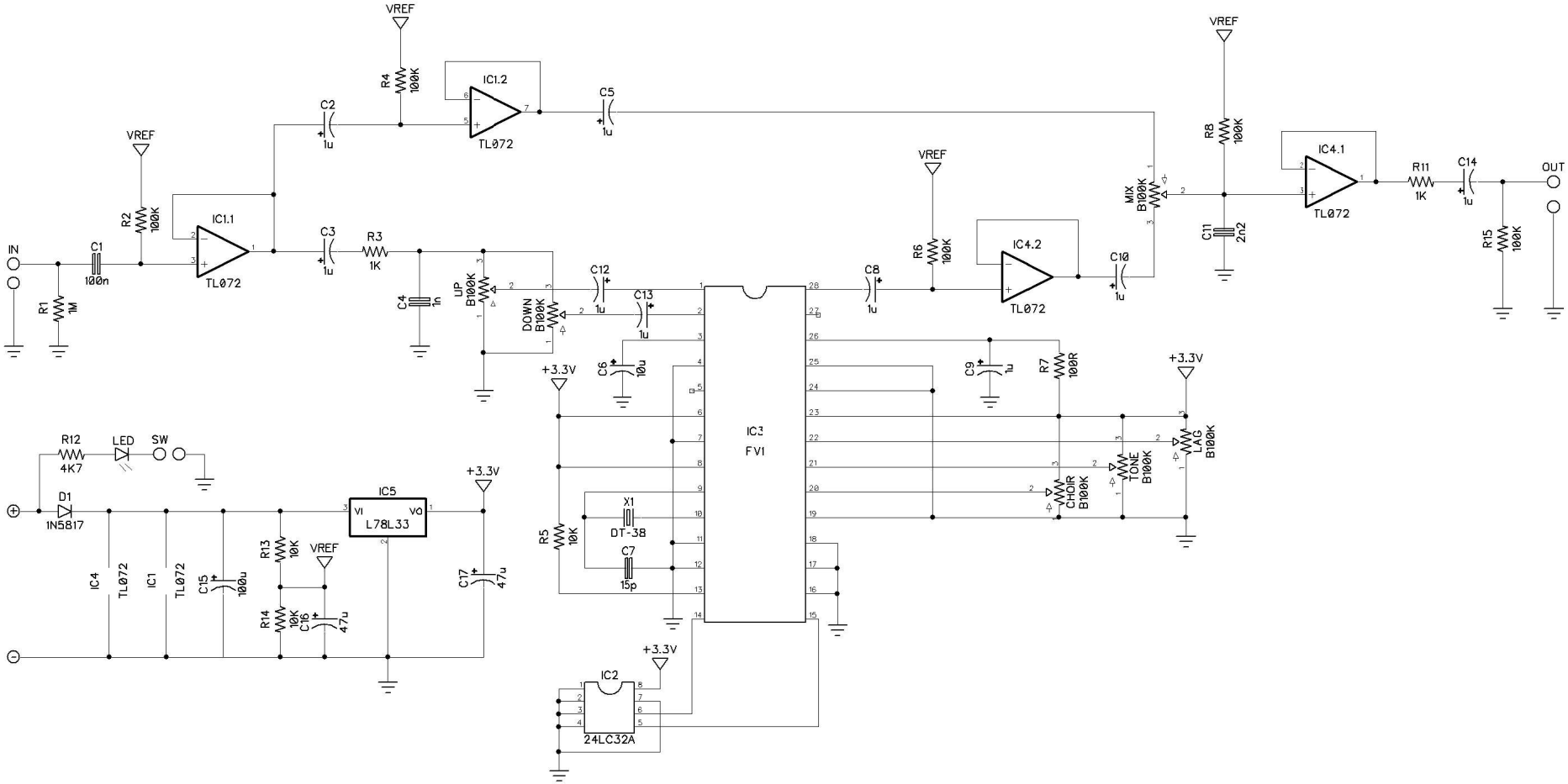

Copyright © 2018 - PedalPCB.com