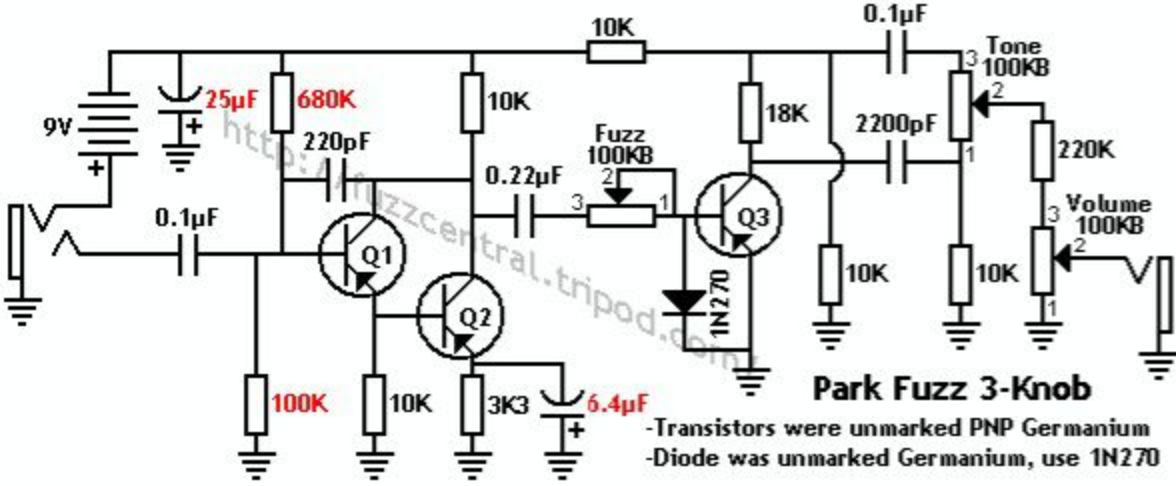
10K
0.1µF
Tone
100KB
9V
25µF
680K
10K
18K
2200pF
220K
220pF
Fuzz
100KB
0.22µF
Volume
100KB
0.1µF
Q1
Q2
Q3
1N270
10K
10K
100K
10K
3K3
6.4µF
Park Fuzz 3-Knob
-Transistors were unmarked PNP Germanium
-Diode was unmarked Germanium, use 1N270
http://fuzzcentral.tripod.com/