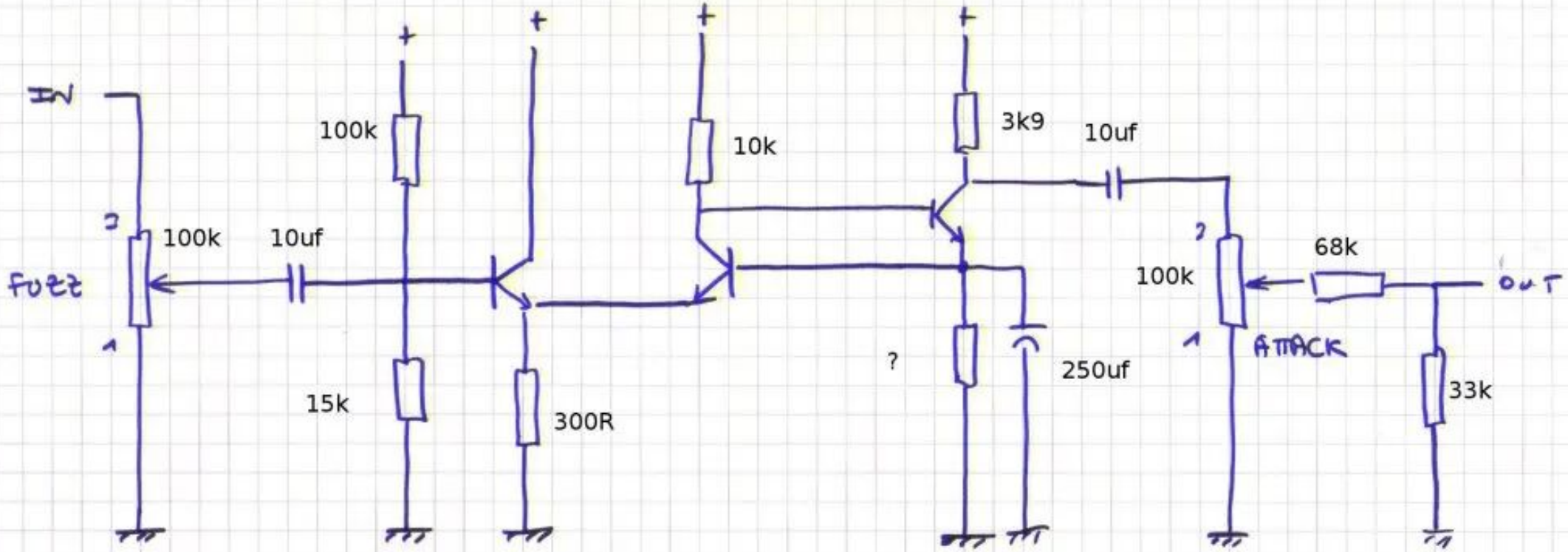
IN
FUZZ
100k
10uf
100k
15k
300R
10k
3k9
10uf
?
250uf
100k
68k
ATTACK
OUT
33k