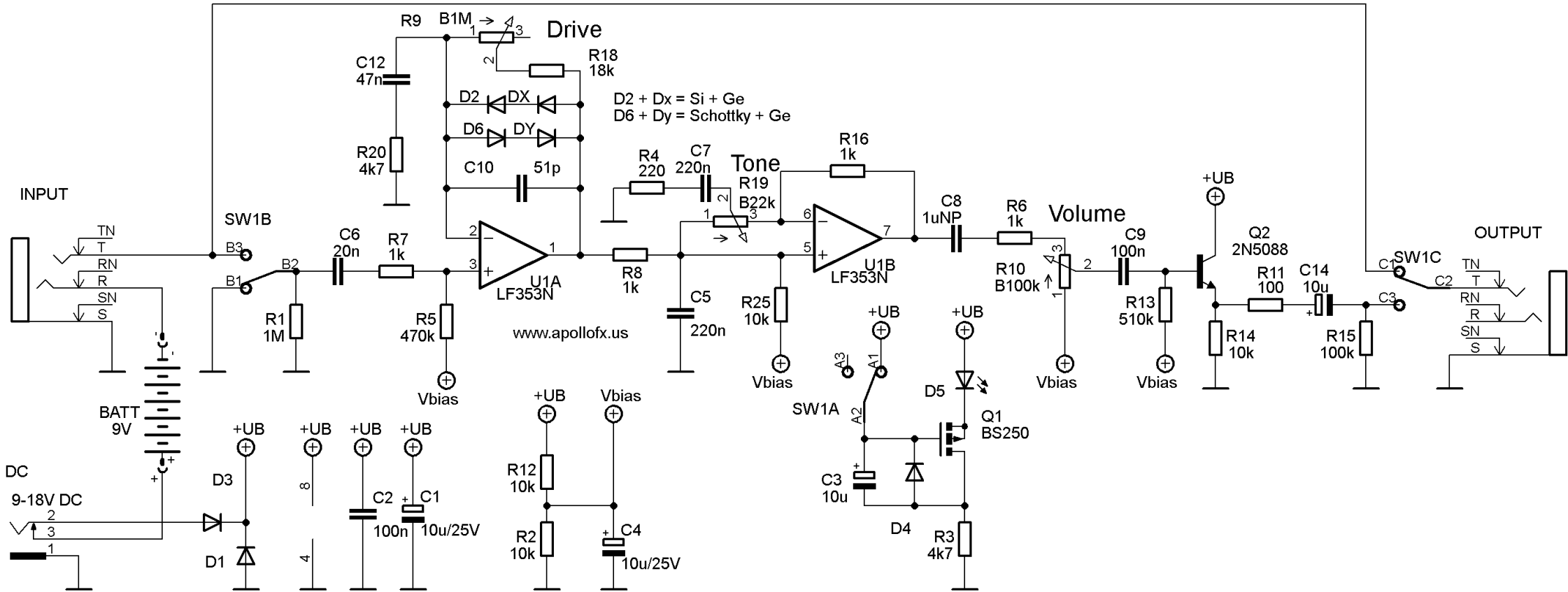Fulltone Robin Trower Overdrive