3 TRANSISTOR FUZZ

By Gus Smalley 1st Built 4/15/98 Scanned 1/22/99 Redrawn Paint Schematic by **Jeff Musser**

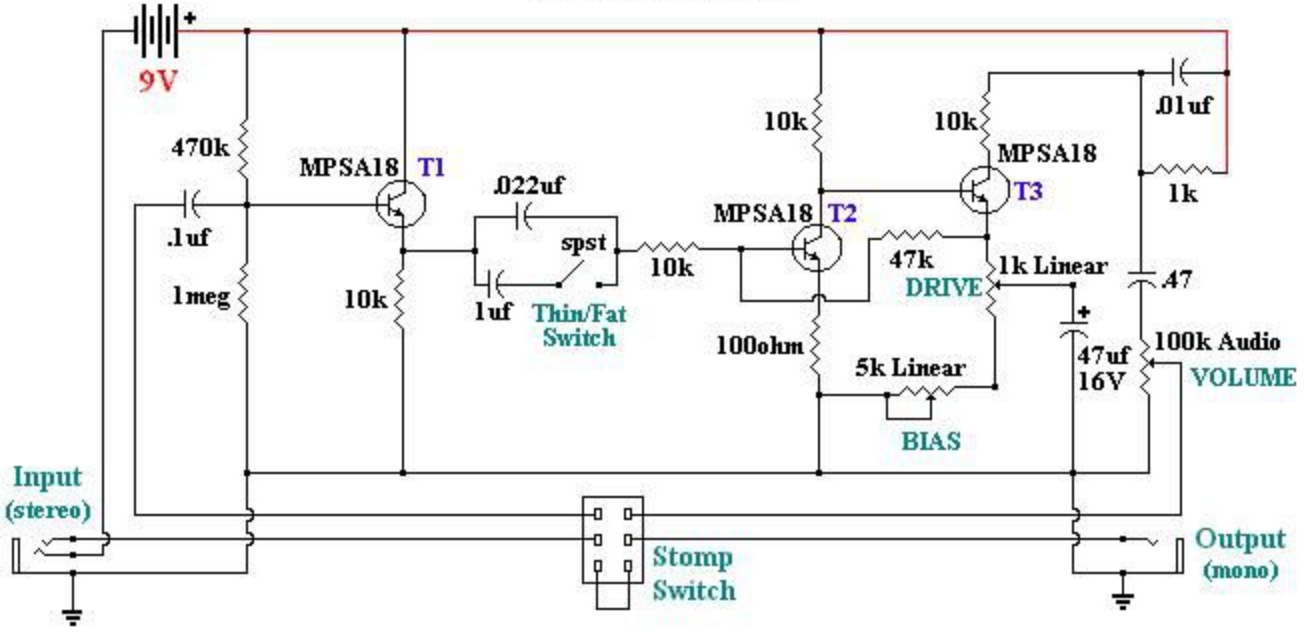

Notes: Transistors 2N3904, 2SC945, PN2222A are optional in the T2 & T3 positions
The volume pot value is optional down to 50k
The .47uf capacitor used with the Volume value may be raised to 1uf