BJT Boost with tone and Buffer

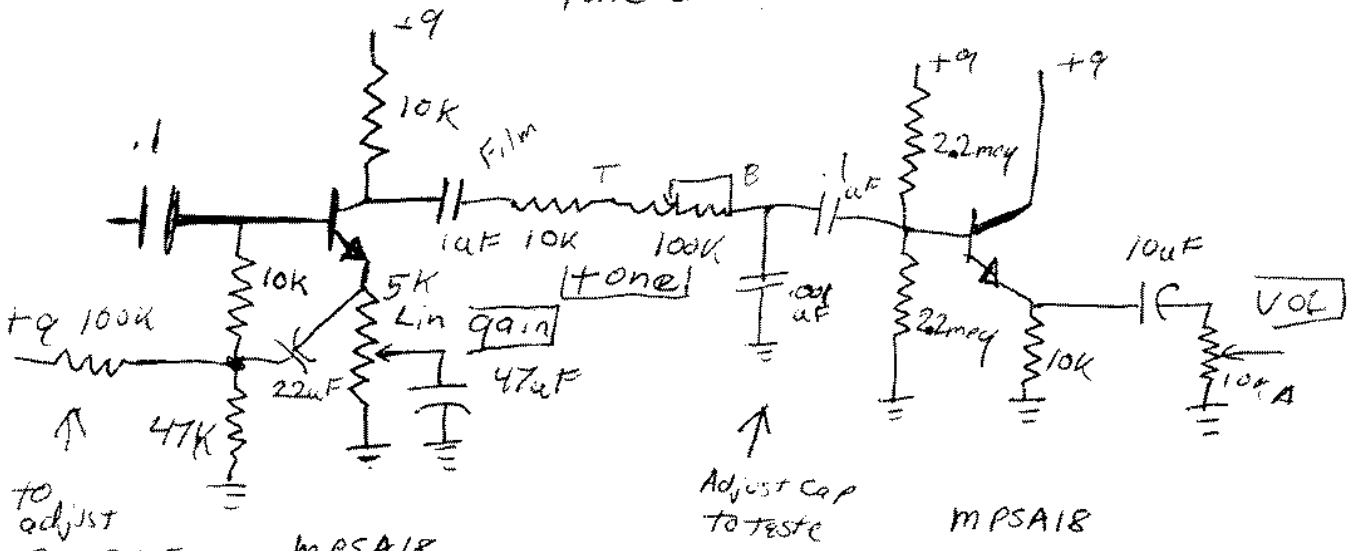

BJT Boost Circuit 12-1-2000

High in Z
Low out Z
Simple tone circuit
Low Noise High gain
NPN Transistor Circuit.

Not built as of 12-1-2000
Gustav Smalley 12-1-2000

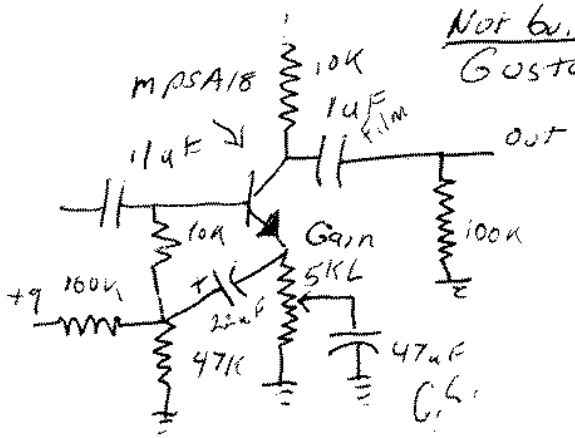

Simple BJT Boost
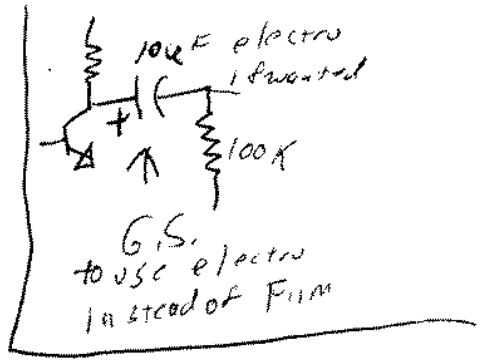
High in Z (Bootstrapped input)
Low out Z ≅ 10K