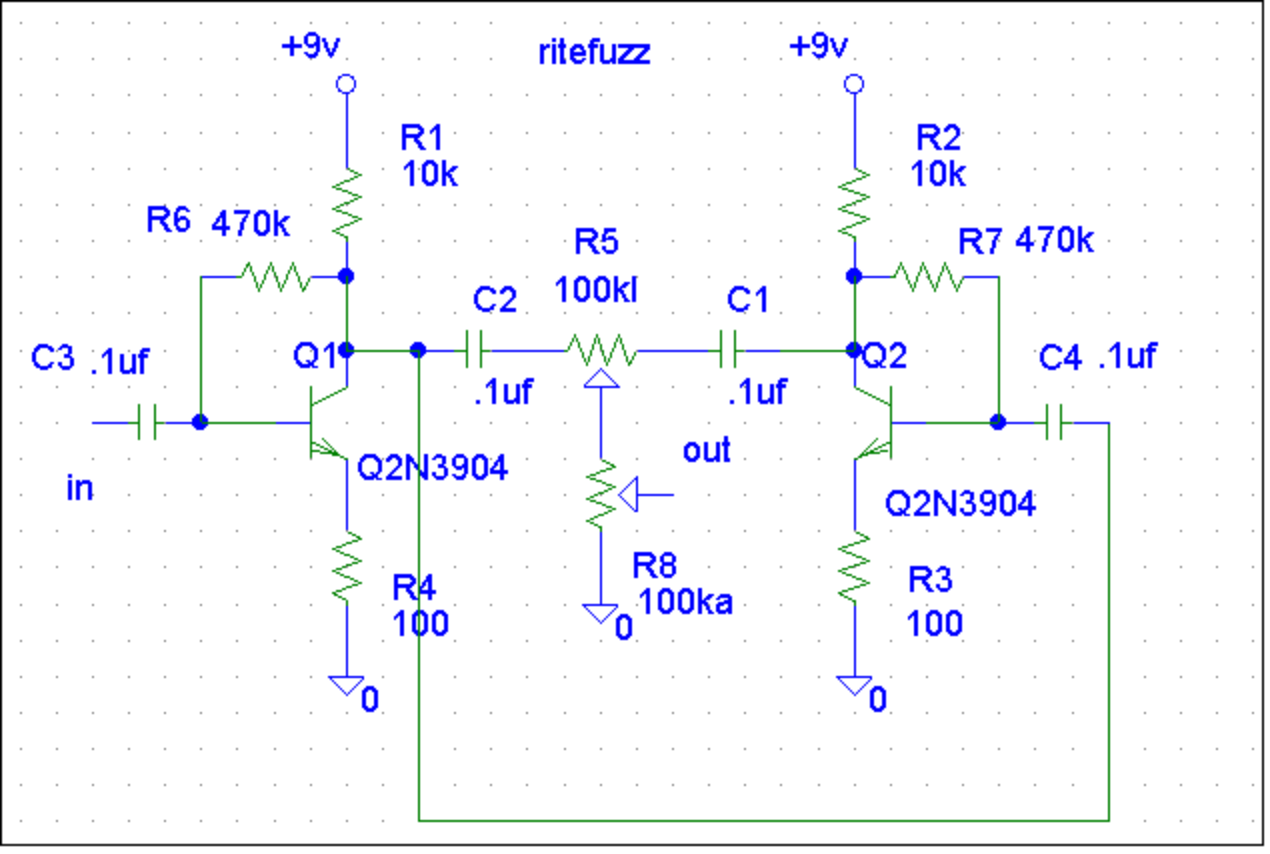
ritefuzz
+9v
+9v
R1
10k
R2
10k
R6 470k
R7 470k
R5
100kl
C2
C1
C3 .1uf
Q1
Q2
C4 .1uf
.1uf
.1uf
in
out
Q2N3904
Q2N3904
R4
100
R8
100ka
R3
100
0
0
0