GOYA PANTHER TREBLE/FUZZ v.0.11

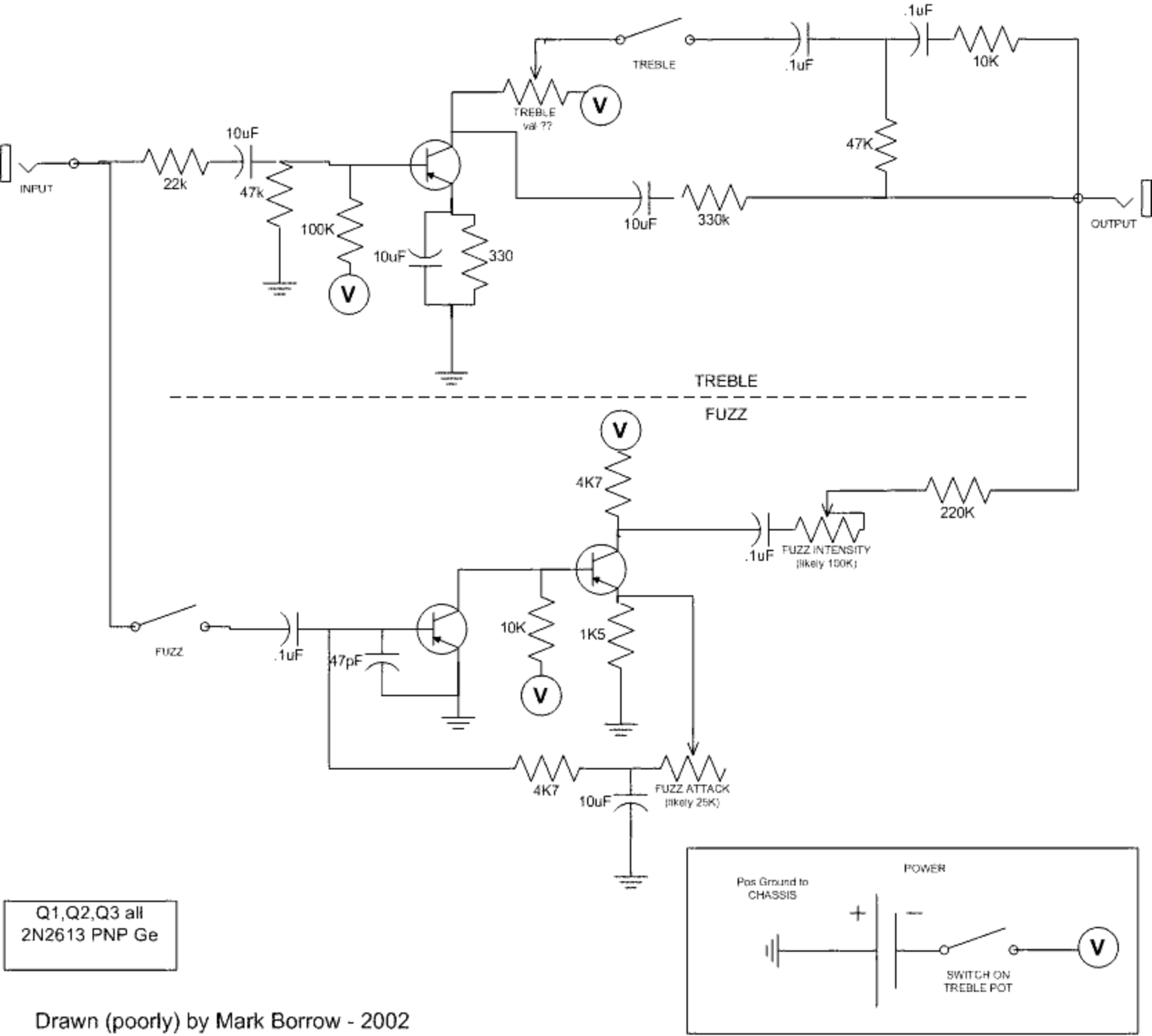

Drawn (poorly) by Mark Borrow - 2002