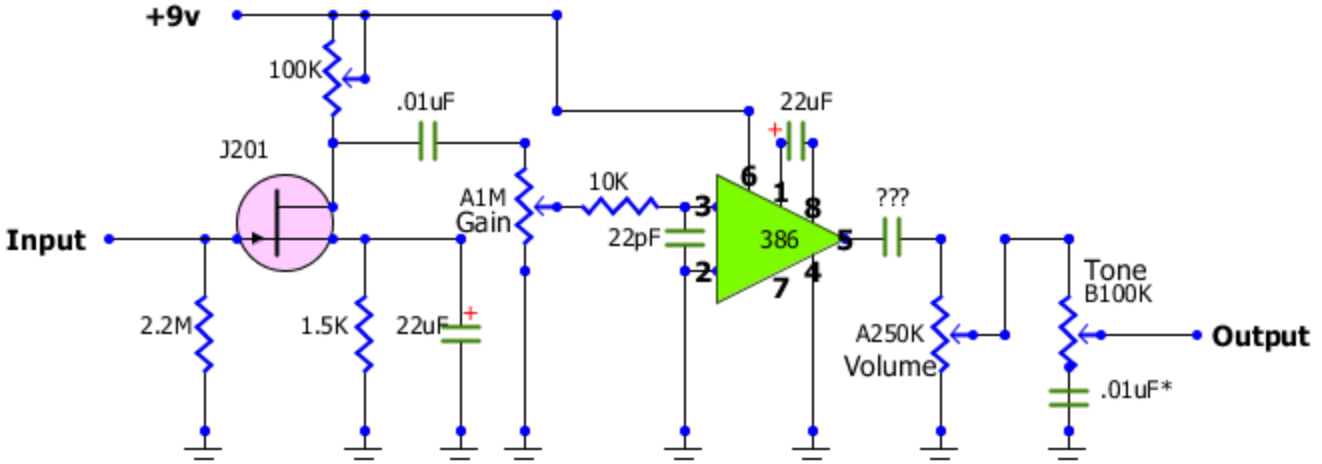
+9v
100K
.01uF
22uF
J201
A1M
Gain
10K
22pF
386
???
Input
2.2M
1.5K
22uF
A250K
Volume
Tone
B100K
Output
.01uF*