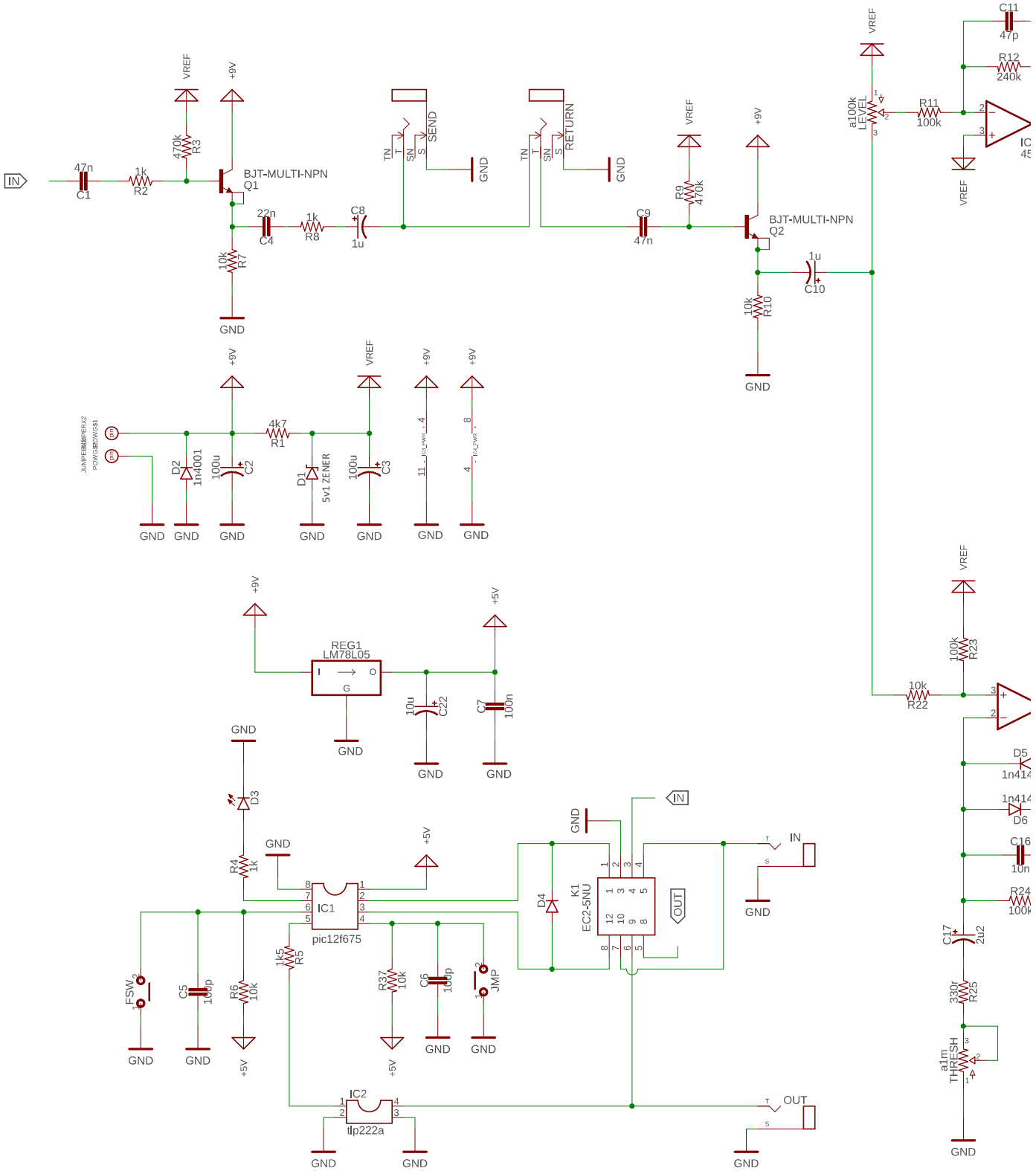
IN
47n
C1
1k
R2
470k
R3
VREF
+9V
BJT-MULTI-NPN
Q1
22n
C4
1k
R8
C8
1u
10k
R7
GND
TN
T
SN
S
SEND
RETURN
C9
47n
R9
470k
BJT-MULTI-NPN
Q2
1u
C10
10k
R10
a100k
LEVEL
R11
100k
C11
47p
R12
240k
IC
45
JUMPER
POWER
4k7
R1
D2
1n4001
100u
C2
D1
5v1 ZENER
100u
C3
REG1
LM78L05
I
O
G
10u
C22
C7
100n
+5V
D3
R4
1k
IC1
pic12f675
1k5
R5
FSW
C5
100p
R6
10k
R37
10k
C6
100p
JMP
K1
EC2-5NU
D4
OUT
IC2
tlp222a
100k
R23
10k
R22
D5
1n414
D6
C16
10n
R24
100k
C17
2u2
330r
R25
a1m
THRESH

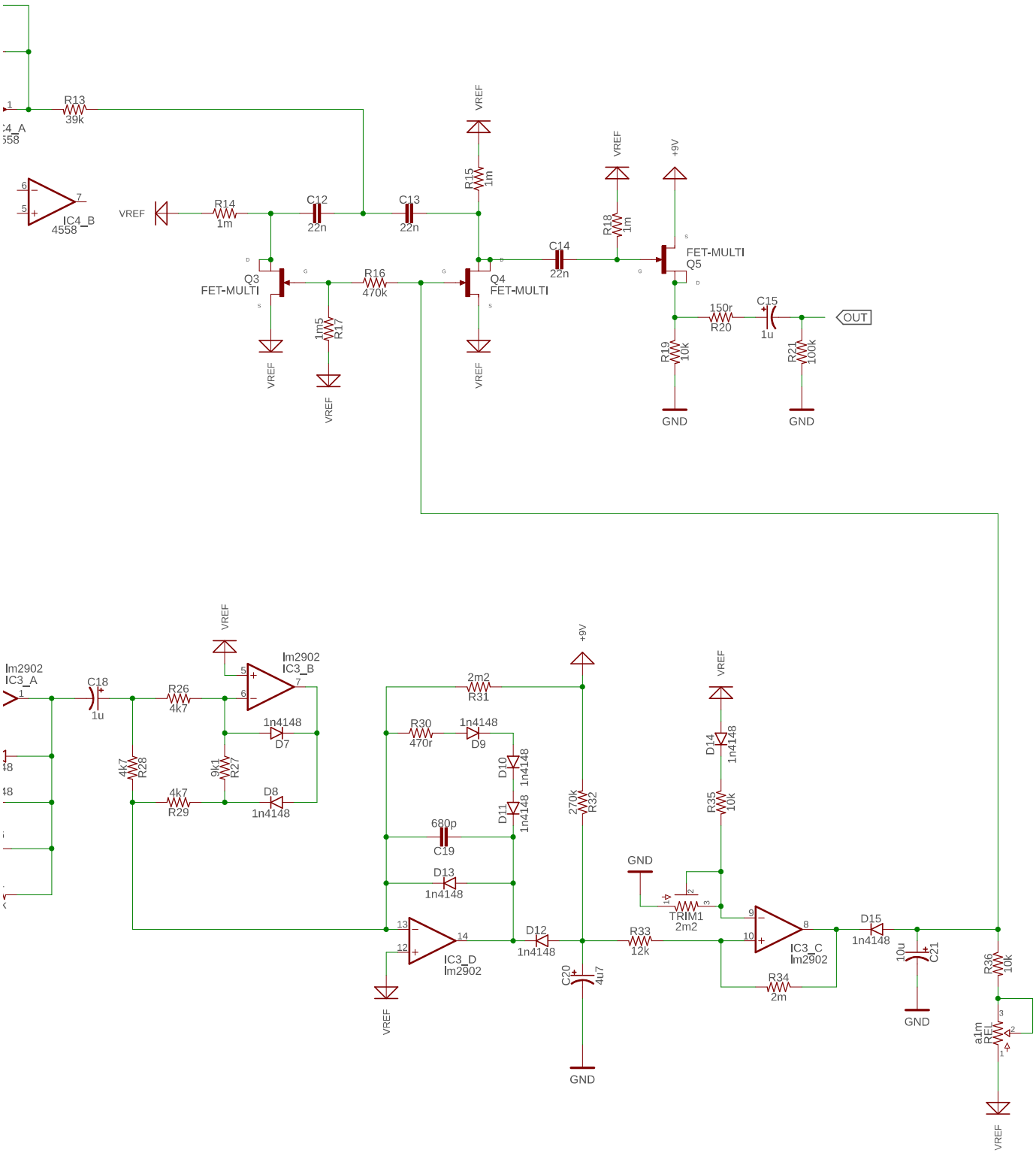
R13
39k
IC4_A
4558
IC4_B
4558
VREF
R14
1m
C12
22n
C13
22n
R15
1m
VREF
Q3
FET-MULTI
R16
470k
Q4
FET-MULTI
1m5
R17
VREF
VREF
VREF
C14
22n
R18
1m
VREF
+9V
FET-MULTI
Q5
150r
R20
C15
1u
OUT
R19
10k
R21
100k
GND
GND
lm2902
IC3_A
C18
1u
R26
4k7
VREF
lm2902
IC3_B
1n4148
D7
4k7
R28
9k1
R27
4k7
R29
D8
1n4148
2m2
R31
+9V
R30
470r
1n4148
D9
D10
1n4148
D11
1n4148
680p
C19
D13
1n4148
270k
R32
IC3_D
lm2902
VREF
D12
1n4148
C20
4u7
GND
VREF
D14
1n4148
R35
10k
GND
TRIM1
2m2
R33
12k
IC3_C
lm2902
R34
2m
D15
1n4148
10u
C21
GND
R36
10k
a1m
REL
VREF