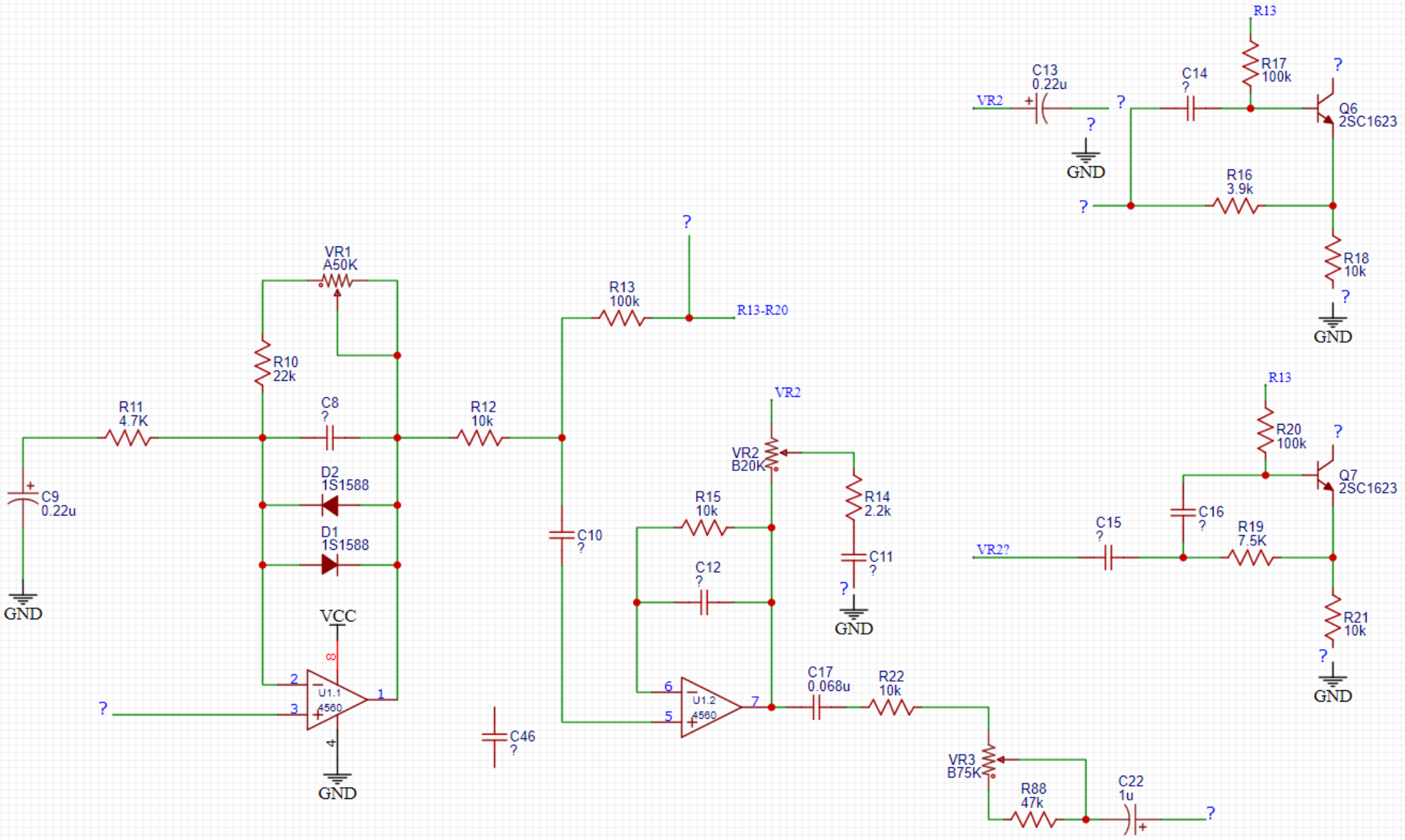
R13
R17
100k
C13
0.22u
C14
?
VR2
Q6
2SC1623
GND
R16
3.9k
R18
10k
VR1
A50K
R13
100k
R13-R20
R10
22k
R11
4.7K
C8
?
R12
10k
VR2
VR2
B20K
R20
100k
Q7
2SC1623
C9
0.22u
D2
1S1588
R15
10k
R14
2.2k
C16
?
C15
?
R19
7.5K
VR2?
D1
1S1588
C10
?
C12
?
C11
?
R21
10k
VCC
U1.1
4560
U1.2
4560
C17
0.068u
R22
10k
C46
?
VR3
B75K
R88
47k
C22
1u