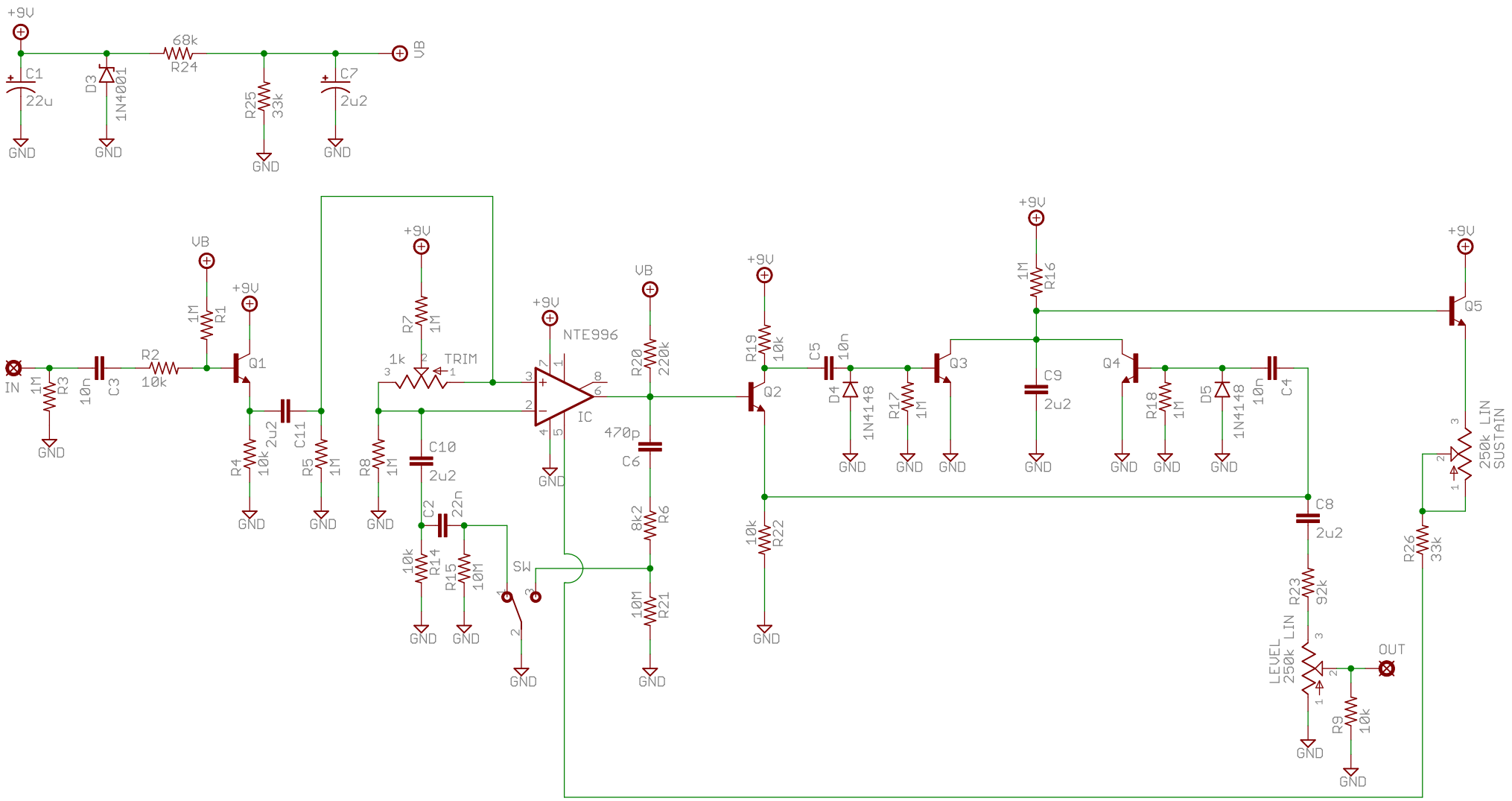

Janglebox Schematic DRAFT version 0.3

Traced by plesur at Freestompboxes.org