REVISION RECORD			
LTR	DATE:	APPROVED:	ECO NO:

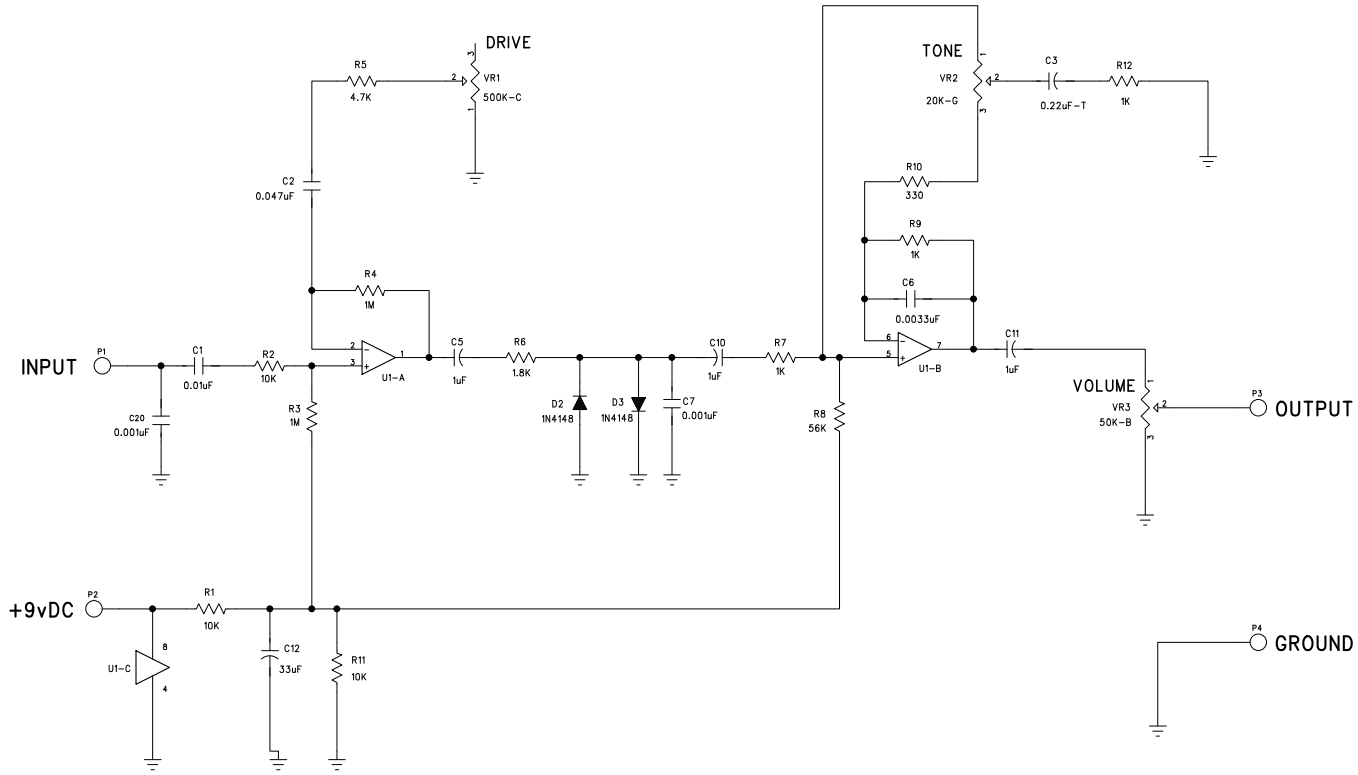

COMPANY: IBANEZ			
TITLE: Dirt Box			
BRAIN CHILD OF: Jeorge Tripps	DATED: 10/21/96		
HELPING HAND:	DATED:	#15451	SIZE: C
LAST MODIFICATION:	DATED:	MODEL NUMBER: MP-D0701	REV:
REALIZED BY:	DATED:	SCALE:	SHEET: OF