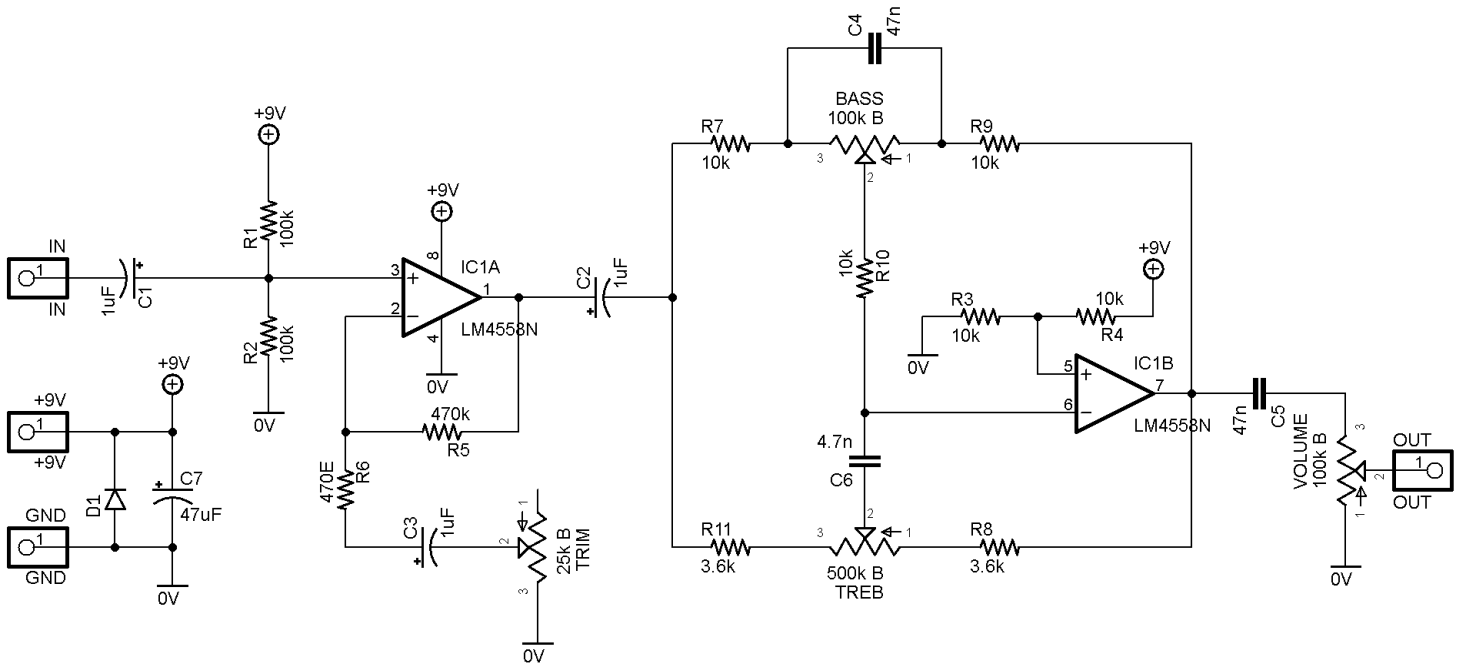
IN
IN
1uF
C1
+9V
R1
100k
R2
100k
0V
+9V
IC1A
LM4558N
0V
470k
R5
470E
R6
C3
1uF
25k B
TRIM
0V
C2
1uF
+9V
+9V
GND
GND
D1
C7
47uF
0V
C4
47n
R7
10k
BASS
100k B
R9
10k
10k
R10
R3
10k
10k
R4
0V
IC1B
LM4558N
4.7n
C6
R11
3.6k
500k B
TREB
R8
3.6k
47n
C5
VOLUME
100k B
OUT
OUT
0V