REVISIONS				
ZONE	REV	DESCRIPTION	DATE	APPROVED
	A	ORIGINAL	11-21-05	S.F.

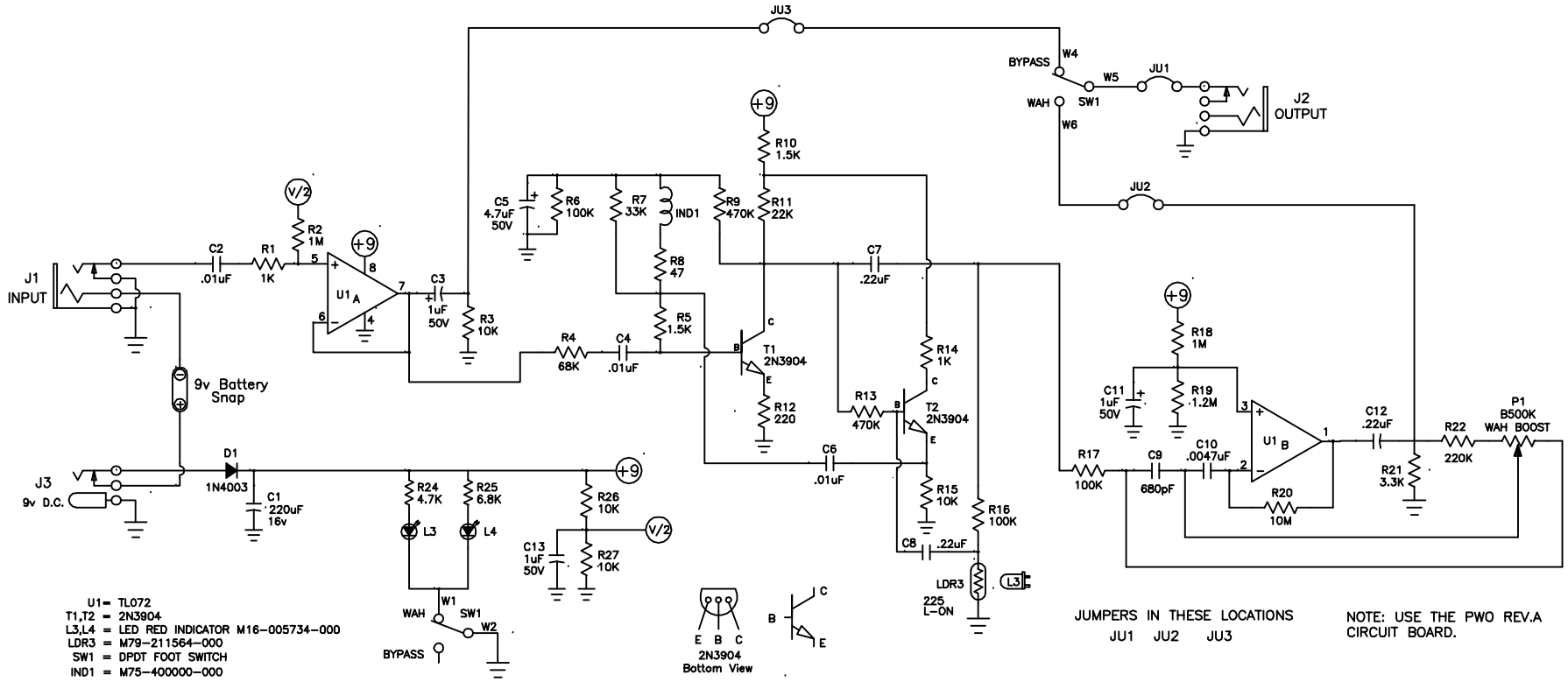

THIS PRINT
HAS BEEN APPROVED
FOR PRODUCTION

APPROVED: S.F. DATE: 11/22/05

UNLESS OTHERWISE SPECIFIED:

ALL RESISTORS 1/4W
ALL RESISTORS +/- 5%

MORLEY

SOUND ENHANCEMENT PRODUCTS, INC.
325 Cary Point Dr., CARY IL. 60013
(847) 639-4646

POWER WAH (PWO)

This drawing and the information contained herein is the exclusive property of Sound Enhancements Inc. Reproduction or use of this information in any form, without our prior written approval, is prohibited.

DRAWN SCOTT FLESHER	SIZE	FSCM NO.	FILE NAME	REV
Part No. 203-000106-000	A		schmpwo.dwg	A
DATE 11-21-2005	SCALE N.T.S.		STATUS CURRENT	

ENGINEERING