Schematic

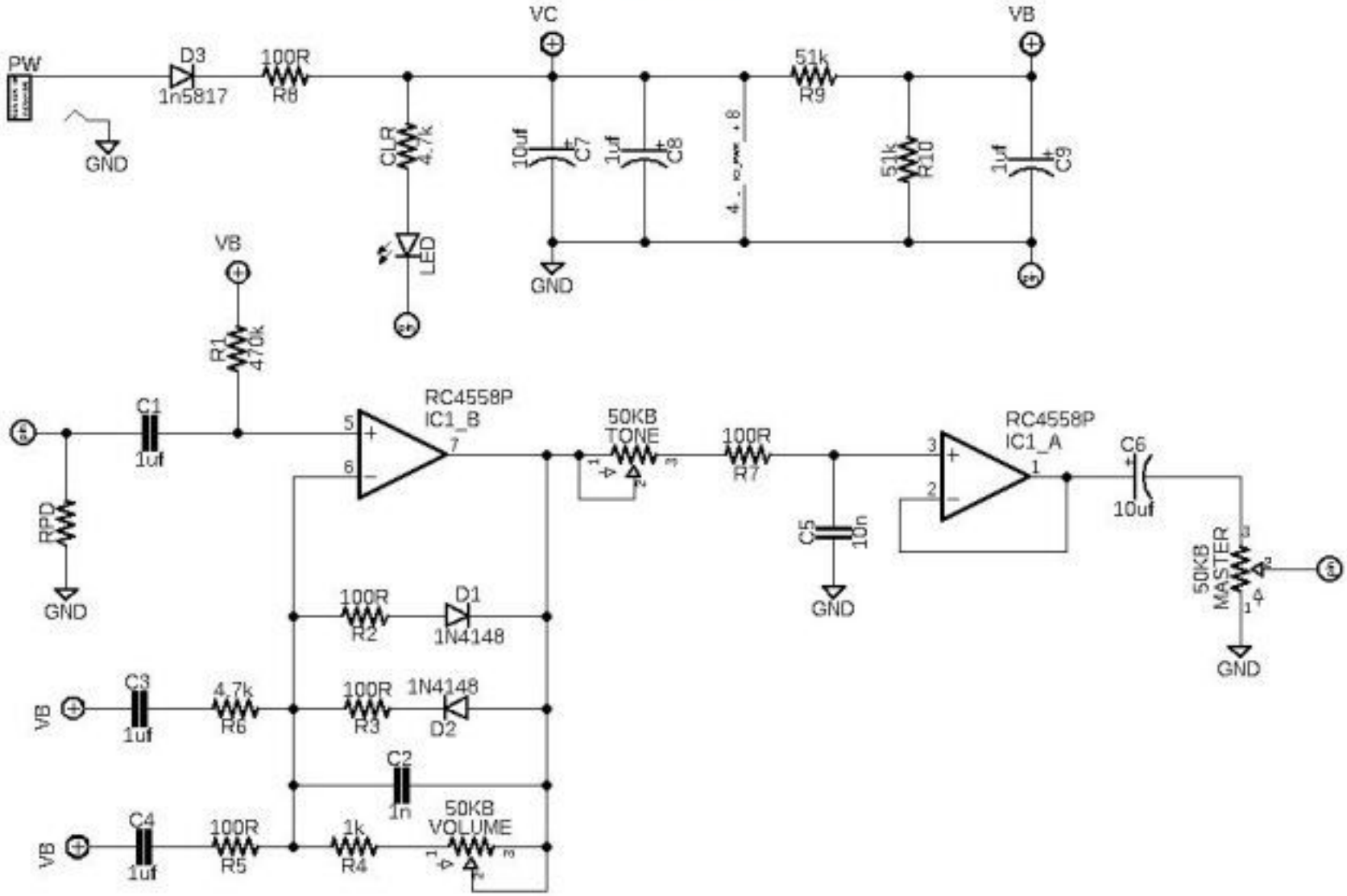
PW
D3
1n5817
100R
R8
GND
VC
CLR
4.7k
LED
10uf
C7
1uf
C8
GND
51k
R9
51k
R10
VB
1uf
C9
VB
R1
470k
C1
1uf
RPD
GND
RC4558P
IC1_B
50KB
TONE
100R
R7
C5
10n
GND
RC4558P
IC1_A
C6
10uf
50KB
MASTER
GND
100R
R2
D1
1N4148
VB
C3
1uf
4.7k
R6
100R
R3
1N4148
D2
C2
1n
VB
C4
1uf
100R
R5
1k
R4
50KB
VOLUME