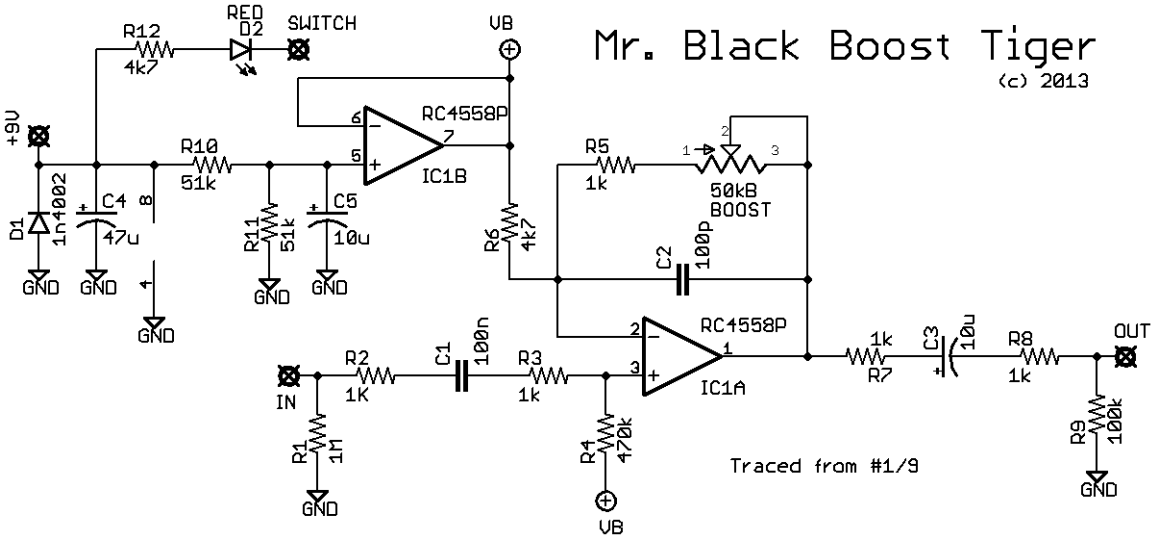
Mr. Black Boost Tiger
(c) 2013
RED
D2
SWITCH
R12
4k7
VB
+9V
RC4558P
IC1B
R10
51k
R11
51k
C5
10u
C4
47u
D1
1n4002
GND
R5
1k
50kB
BOOST
R6
4k7
C2
100p
RC4558P
IC1A
IN
R2
1K
C1
100n
R3
1k
R1
1M
R4
470k
R7
1k
C3
10u
R8
1k
OUT
R9
100k
Traced from #1/9