Providence Sonic Drive SDR-5
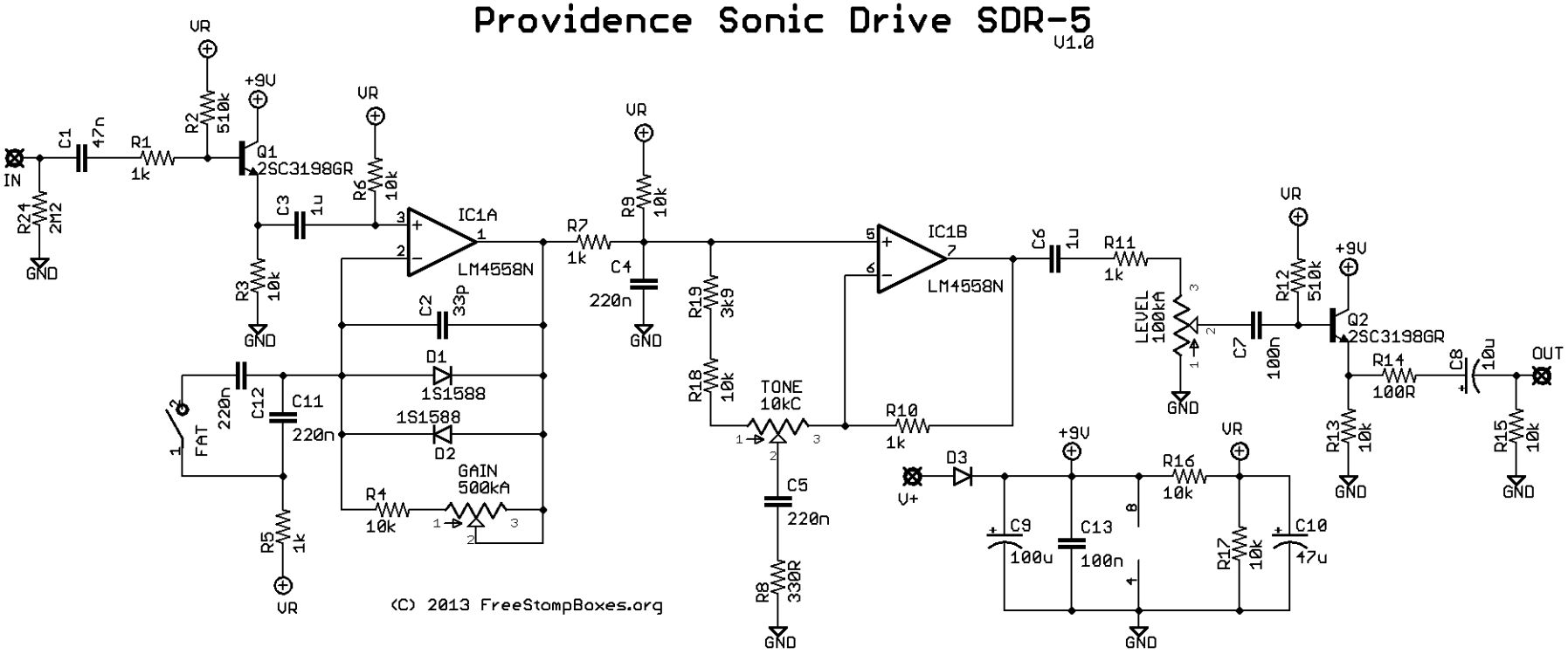
V1.0