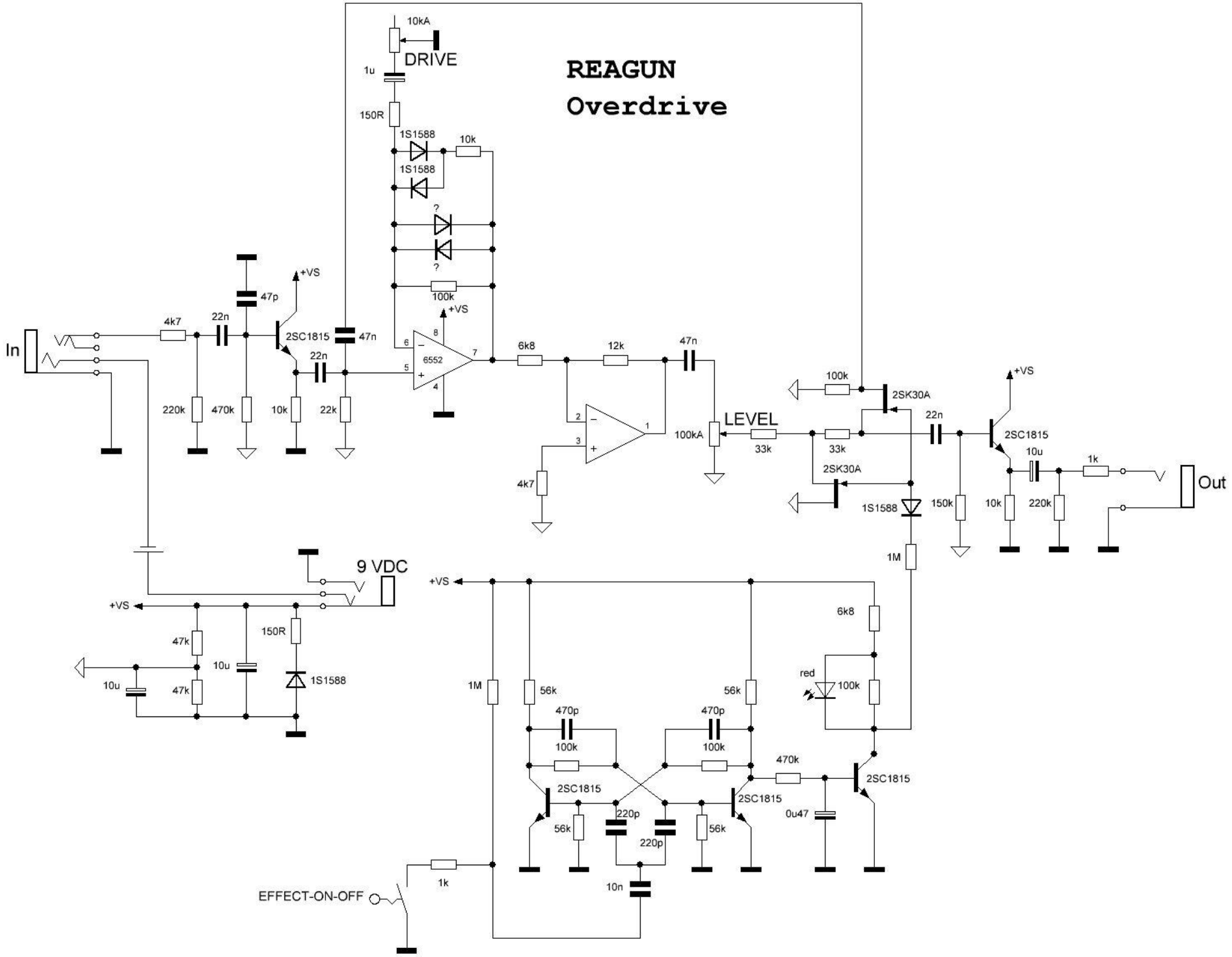
REAGUN
Overdrive
10kA
DRIVE
1u
150R
1S1588
1S1588
10k
?
?
100k
+VS
6552
6k8
12k
47n
4k7
In
4k7
22n
47p
+VS
2SC1815
47n
22n
220k
470k
10k
22k
100k
2SK30A
LEVEL
100kA
33k
33k
2SK30A
22n
+VS
2SC1815
10u
1k
Out
1S1588
150k
10k
220k
1M
9 VDC
+VS
+VS
47k
150R
10u
1S1588
10u
47k
1M
56k
470p
100k
2SC1815
56k
220p
220p
56k
10n
1k
EFFECT-ON-OFF
6k8
red
100k
470k
2SC1815
0u47