ROLAND AF-100 BEE BAA

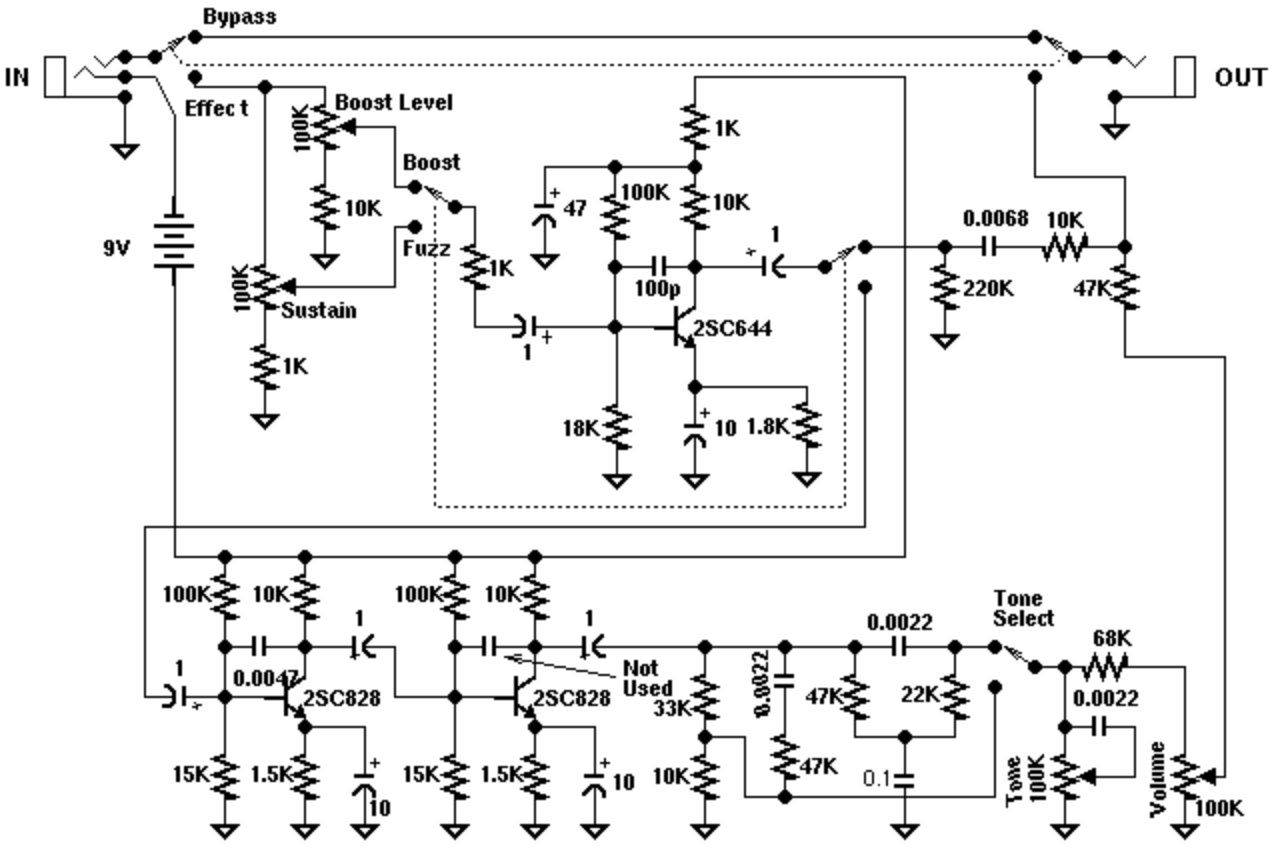

Drawing Copyright 1996 R.G. Keen. All rights reserved.