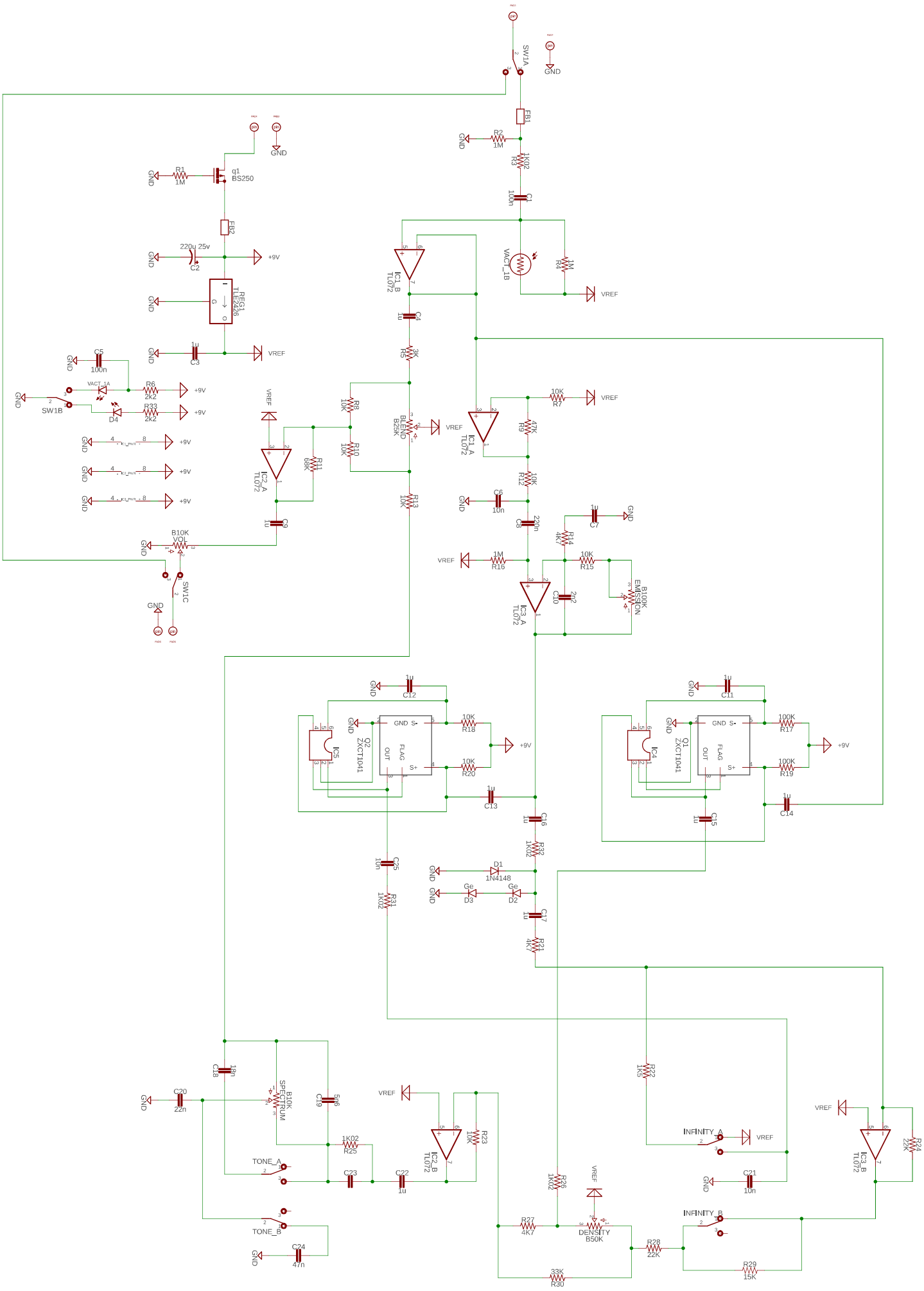

SW1A
GND
FB1
R2
1M
R3
1K02
C1
100n
VACT_1B
R4
1M
VREF
IC1_B
TL072
C4
1u
R5
3K
R8
10K
R10
10K
BLEND
B25K
R11
68K
IC2_A
TL072
C9
1u
R13
10K
R1
1M
q1
BS250
FB2
220u 25v
C2
+9V
REG1
TLE2426
C3
1u
C5
100n
VACT_1A
R6
2k2
R33
2k2
D4
SW1B
B10K
VOL
SW1C
IC1_A
TL072
R7
10K
R9
47K
R12
10K
C6
10n
C8
220n
C7
1u
R14
4K7
R16
1M
R15
10K
C10
2n2
B100K
EMISSION
IC3_A
TL072
C12
1u
IC5
Q2
ZXCT1041
GND
S-
FLAG
OUT
S+
R18
10K
R20
10K
C13
1u
C11
1u
IC4
Q1
ZXCT1041
R17
100K
R19
100K
C14
1u
C15
1u
C16
1u
R32
1K02
C25
10n
R31
1K02
D1
1N4148
D3
D2
C17
1u
R21
4K7
C18
18n
C20
22n
B10K
SPECTRUM
C19
5n6
R25
1K02
TONE_A
TONE_B
C23
C22
1u
C24
47n
IC2_B
TL072
R23
10K
R22
1K5
R26
1K02
R27
4K7
DENSITY
B50K
R28
22K
R30
33K
INFINITY_A
INFINITY_B
C21
10n
R29
15K
IC3_B
TL072
R24
22K